MULTIPEC

Illustrated Parts List

Revision: 4

Part Number : .87238 (Text)
.87237 (Binder & text)

Production Engineering (NZ) Ltd, P.O. Box 308, Marton, New Zealand
Production Engineering (AUST) Pty Ltd, P.O. Box 528, Crows Nest, NSW 2065 Australia
Production Engineering (UK) Ltd, Cardax House,19 Titan Court, Portenway Business Park, LaPorte Way, Luton, Bedfordshire LU4 8LL, England

© Production Engineering (New Zealand) Ltd 1993

All rights reserved. No part of this manual may be copied or reproduced in any form or by any means without the prior written consent of Production Engineering (New Zealand) Limited.

The information in this manual is subject to change without notice and should not be construed as a commitment by PEC. PEC has taken great effort to verify the accuracy of this manual but assumes no responsibility for any technical inaccuracies or typographical errors.

Suggestions

If you have any suggestions as to how we can improve the quality and/or readability of this manual, then we would be happy to hear from you. We can be contacted at the following address:

Senior Technical Writer
Production Engineering (New Zealand) Ltd.
P.O. Box 308
Marton
New Zealand

Caution

This equipment contains components that can be damaged by Electrostatic Discharge.
Should you ever need to service this equipment, you must follow full anti-static precautions.
Prior to servicing, earth all equipment and wear an anti-static strap.
Components must be transported in anti-static material.

List of effective pages

Dates of issue of the original and change pages for the Multipec Parts List.

Revision 1 (original)	November 1992
Revision 2	30 July 1993
Revision 3	June 1994
Revision 4	February 1996

Page number	Revision - Change	Page number	Revision - Change
Title	4-0	H-23 to H-33	2-0
A page	4-0	H-34 to H-35	3-0
C-i to C-iv	4-0	H-36	2-0
F-1 to F-2	1-0	H-37 to H-40	3-0
F-3	4-0		
F-4	3-0	M-1	3-0
F-5	1-0	M-2	1-0
F-6 to F-8	4-0	M-3 to M-4	3-0
F-9 to F-10	1-0	M-5 to M-6	1-0
F-11	3-0	M-7	3-0
F-12 to F-13	1-0	M-8 to M-10	2-0
F-14	3-0	M-11	3-0
F-15	4-0	M-12 to M-14	2-0
F-16 to F-17	1-0	M-15	3-0
F-18 to F-19	4-0	M-16 to M-17	2-0
F20	1-0	M-18 to M-19	3-0
F21	2-0	M-20 to M-22	2-0
F-22 to F-24	3-0	M-23	3-0
F-25 to F-26	2-0	M-24 to M-33	2-0
F-27	3-0	M-34 to M-36	3-0
F-28	2-0	M-37	2-0
F29 to F-32		M-38 to M-39	4-0
H-1 to H-2	1-0	M-40	2-0
H-3	2-0		
H-4	4-0	P-1 to P-2	2-0
H-5	1-0	P-3	3-0
H-6 to H-8	4-0	P-4 to P-6	2-0
H-9	1-0	P-7	3-0
H-10 to H-11	4-0	P-8 to P-10	2-0
H-12 to H-13	1-0	P-11 to P-12	3-0
H-14 to H-15	4-0	P-13 to P-14	2-0
H-16 to H-17	2-0	P-15	3-0
H-18 to H-19	4-0	P-16 to P-18	2-0
H-20 to H-21	2-0	P-19	3-0
H-22	4-0	P-20 to P-22	2-0

Page number	Revision - Change
P-23	3-0
P-24	2-0
P-25 to P-72	3-0
S-1 to S-2	1-0
S-3	3-0
S-4 to S-22	2-0
S-23	3-0
S-24 to S-27	2-0
S-28 to S-30	3-0
S-31	2-0
S-32 to S-35	3-0
S-36 to S-37	2-0
S-38 to S-48	3-0

Contents

Frame assemblies

Frame assembly 8000 series F-1
Panel assembly F-5
Holster panel F-9
Holster assembly F-13
Internal assembly F-17
Internal assembly - LPG F-21
Mains wiring F-25
Mains wiring LPG F-29

Head assemblies

Head V1 ..... H-1
Head V2 ..... H-5
Door assembly - 2 product H-9
Door assembly - 3 product H-13
Door assembly - Hex pump H-17
Light tube assembly H-21
Light tube assembly - Long H-25
Light box wiring H-29
Lighting / comms box H-33
Lighting / comms box - LPG H-37

Pump module assemblies

Pump module - Single M-1
Pump module - Duo M-5
Standard speed pump assembly & 450 Watt motor V1 ..... M-9
High power pump assembly & 750 Watt motor V1 ..... M-13
Standard speed pump assembly & 450 Watt motor V2 ..... M-17
High power pump assembly & 750 Watt motor V2 ..... M-21
Dispenser module - Single M-25
Dispenser module - Duo M-29
LPG module M-33
Encoder M-37

Contents

PCB's

Gilbarco interface PCB - 83826 ..... P-1
Input processor PCB - 83841 ..... P-5
Main Processor PCB - 87101 ..... P-9
Control Logic Distribution PCB - 87111 ..... P-13
MPD Display PCB - 87121 ..... P-17
Hex pump display PCB - 87126 ..... P-21
AC Control PCB Dispenser - 87133 ..... P-25
AC Control PCB Pump - 87132 ..... P-29
Encoder Module PCB - 87141 ..... P-33
Encoder series II PCB - 87146 ..... P-37
Power Supply PCB - 87151 ..... P-41
3 Product, Dollars per Litre Display PCB- 87201 ..... P-45
Zener barrier PCB - 87236 ..... P-49
2 Product, Dollars per Litre Display PCB- 87241 ..... P-53
Single Price Display PCB - 87271 ..... P-57
Dollars & Litres Display PCB - 87276 ..... P-61
Preset Display PCB - 87281 ..... P-65
Totes PCB V2 - 87286 ..... P-69

Standard pump parts

Flow Meter - Tatsuno MP-02515G - Part 820030 ..... S-1
Solenoid Valve Assembly - ASCO S-5
Solenoid valve assembly LPG - ASCO S-11
Hose assembly - crimped S-21
Hose assembly - LPG S-25
ZVA nozzle assembly - 3/4 & 1 inch S-31
Gas Guard nozzle S-37
Tatsuno pump (PGS-0257) & air separator S-41

Contents

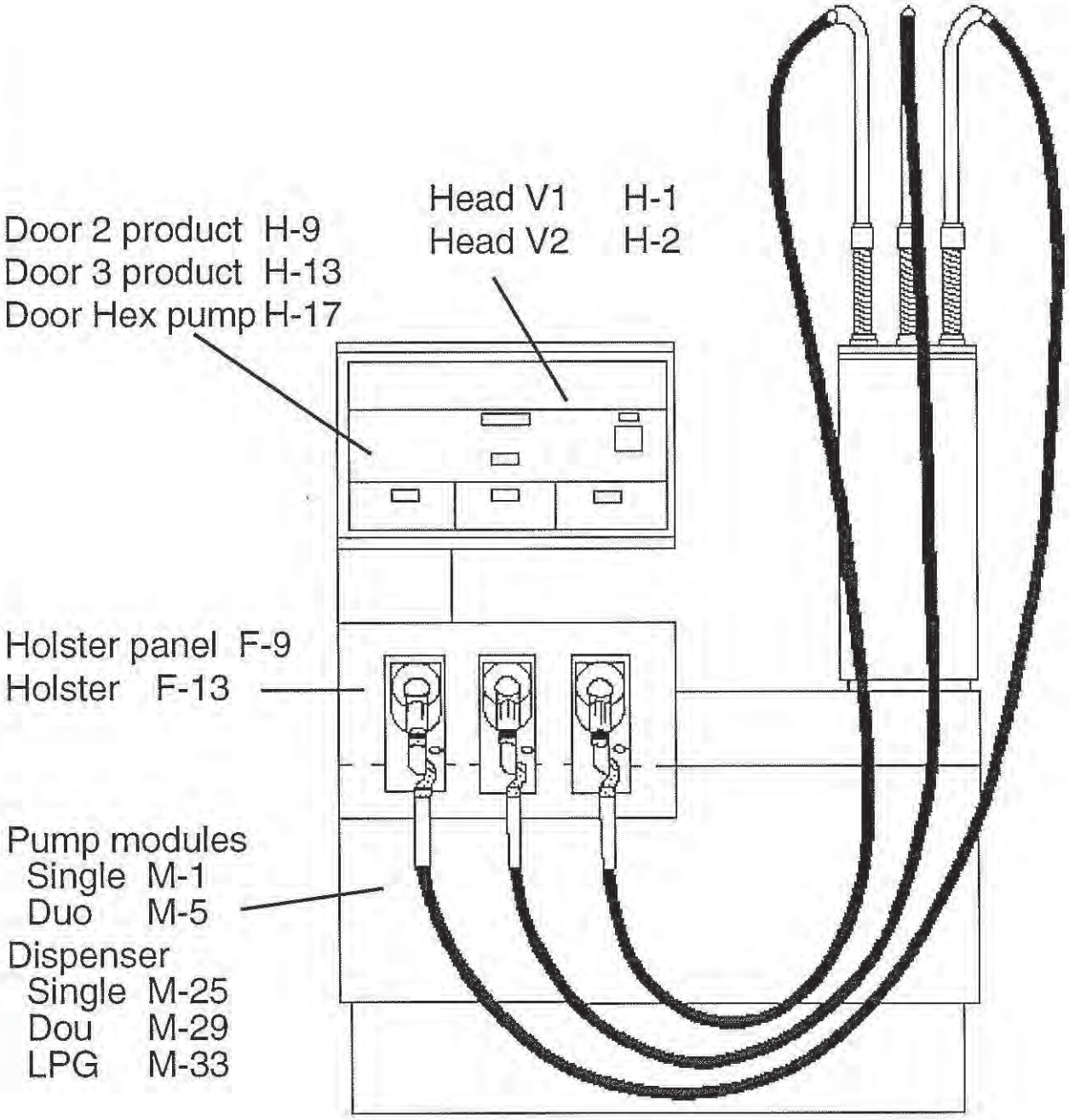
Head V1 H-1
Head V2 H-2
Door 2 product H-9
Door 3 product H-13
Door Hex pump H-17
Holster panel F-9
Holster F-13
Pump modules
Single M-1
Duo M-5
Dispenser
Single M-25
Dou M-29
LPG M-33

Contents

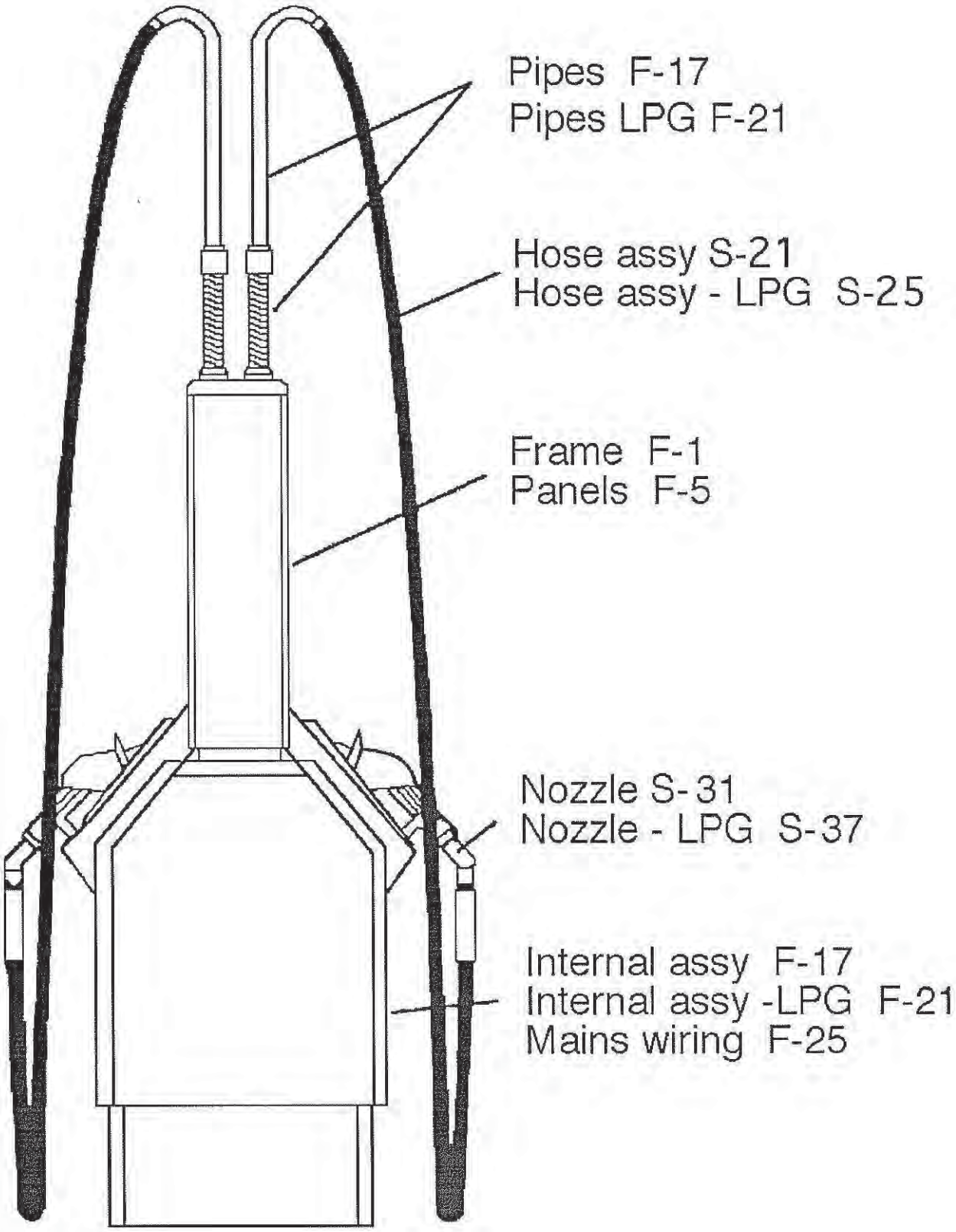
Pipes F-17
Pipes LPG F-21
Hose assy S-21
Hose assy - LPG S-25
Frame F-1
Panels F-5
Nozzle S-31
Nozzle - LPG S-37
Internal assy F-17
Internal assy -LPG F-21
Mains wiring F-25

Frames & Panels

Contents

Frame assembly - 8000 series F-1
Panel assembly F-5
Holster panel F-9
Holster assembly F-13
Internal assembly F-17
Internal assembly - LPG F-21
Mains wiring F-25
Mains wiring - LPG F-29

June 1994

Frame assembly
8000 series

Frame assembly

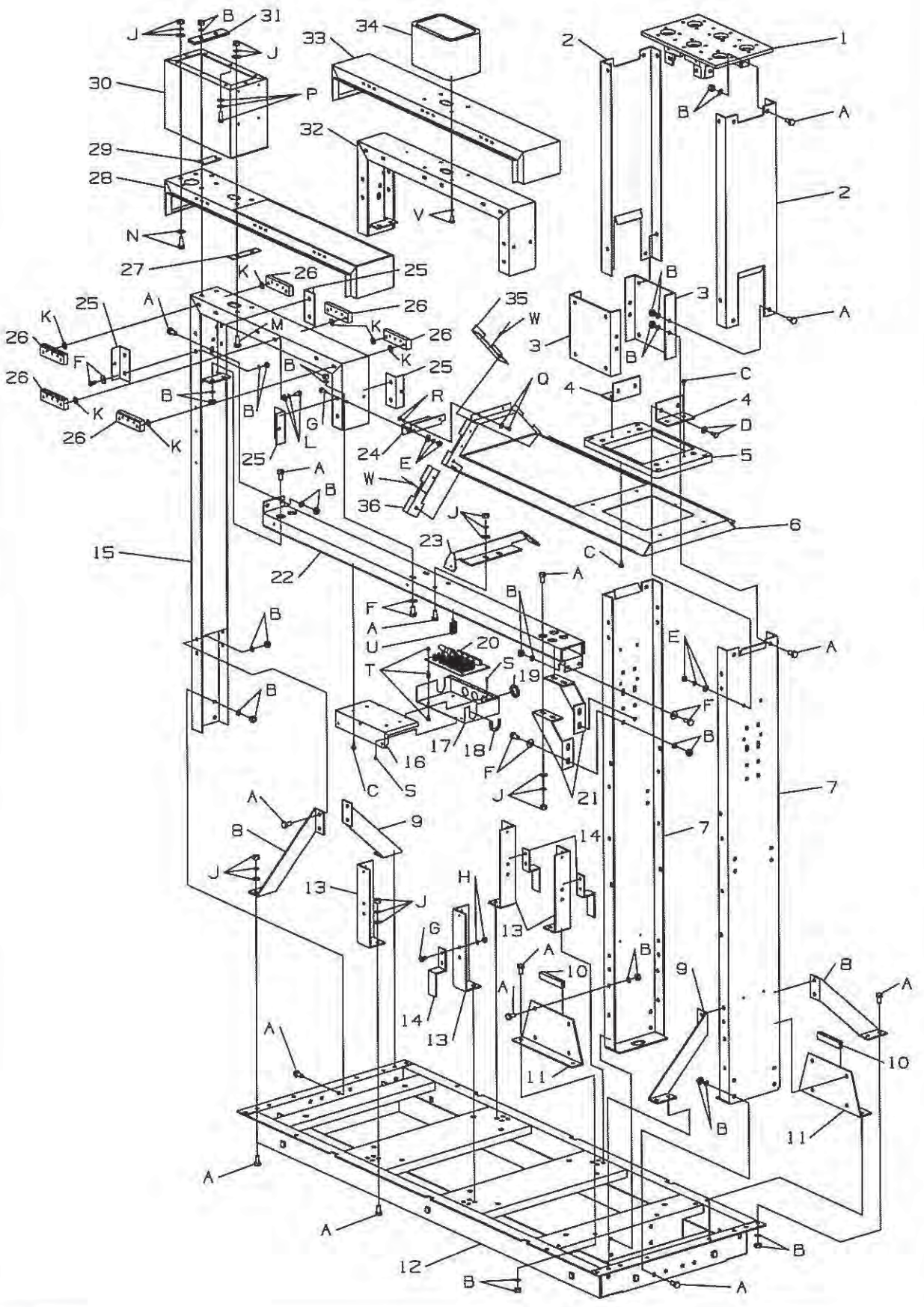

Frame assembly

Item	Part No	Description	Qty
1	.87920	Cap casting	1
2	.87838	Column upper	2
3	.87946	Jointing plate	2
4	.87858	Column casting mounting bracket	2
5	.87927	Column mounting casting	1
6	.87875	Main capping panel	1
6a	.87656	Protective strip - Main panel	
7	.87857	Column lower	2
8	.87846	Column brace - RH	2
9	.87845	Column brace - LH	2
10	829170	Edge trim 4896	
11	.87847	Column tie	2
12	.87860	Base assembly	1
	.07670	Base assembly - LPG [Not shown]	1
13	.87848	Panel mounting bracket (base)	4
14	.87863	Hose clamp	3
15	.87865	Head column assembly	1
16	.87914	Logic box lid [Not used on the Hex pump]	1
17	.87913	Logic box base [Not used on the Hex pump]	1
	.07431	Lighting/comms box assy [replaces 87914, 87913, 87111] (not shown) **See page H-33**	
18	829100	Grommet KG-012 250 mm lengths	2
19	829100	Grommet KG-012 250 mm lengths	3
20	.87111	Control logic distribution PCB assembly [Not used on the Hex pump]	1
21	.87856	Cross member/column brace [Not used on the Hex pump with LPG]	2
22	.87861	Cross member assembly	1
23	.87850	Main capping panel mounting bracket [older models only]	1
24	.87859	End panel mounting bracket - upper	1
25	.87895	Prop anchor bracket	4
26	.87826	Hinge spacer	6
27	.87806	Head packing spacer	1
28	.87799	Holster capping panel - offset	1
28a	87655	Protective strip - Holster cap	
29	.87736	Head column clamp spacer	1
30	.87739	Head mounting column V2	1
31	.87737	Head column clamp	1
		Items 15, 27 to 31, M, N are used with V2 head (Offset column - current production model)	
32		Head column assembly (Centre mount)	1
33	.87878	Holster capping panel (Centre mount)	1
34	.87976	Head mounting column assembly (Centre mount)	1
		Items 32-34, V are used with V1 head (Central column - not current production model)	
35	.87899	Watershed bracket - Rear	1
36	.87898	Watershed bracket - Front	1
		Items 35, 36 & W are not in current production	

Frame assembly

Item	Part No	Description
A	800960	Setscrew engineers M8 x 16
B	803240	Nut full steel M8
	804030	Washer internal fan disc M8
C	802170	Screw tap it HWF 10 x ½"-slot
D	800060	Setscrew engineers M6 x 12
	804460	Washer flat steel M6 x 16 mm
E	803230	Nut full steel M6
	804020	Washer internal fan disc M6
	804460	Washer flat steel M6 x 16 mm
F	800090	Setscrew engineers M8 x 16
	804440	Washer flat steel M8
G	800960	Setscrew engineers M8 x 16
H	803230	Nut full steel M6
	804020	Washer internal fan disc M6
J	803240	Nut full steel M8
	804030	Washer internal fan disc M8
	804440	Washer flat steel M8
K	804340	Washer flat ¼ x 20 swg
L	800060	Setscrew engineers M6 x 12
	804020	Washer internal fan disc M6
	804460	Washer flat steel M6 x 16 mm
M	800100	Setscrew engineers M8 x 20
N	800100	Setscrew engineers M8 x 20
	804440	Washer flat steel M8
P	800070	Setscrew engineers M6 x 20
	804460	Washer flat steel M6 x 16 mm
	804460	Washer flat steel M6 x 16 mm
Q	800650	Screw posidrive pan hd M4 x 12
	804410	Washer flat steel M4 x 11 mm OD
R	803160	Nut full steel M4
	804500	Washer internal fan disc M4
S	802170	Screw tap It HWF 10 x ½"-slot
T	801270	Screw nylon Pan Hd-PNS632-06PS
	866750	Spacer nylon M+F SMF6-10
	803520	Nut dome nylon - PNN632C
U	824110	Wire saddle nylon - PWS18 18mm
V	800060	Setscrew engineers M6 x 12
	804020	Washer internal fan disc M6
W	806270	Rivet pop avex ⅛ 1661-0410

Panel assembly

Panel assembly

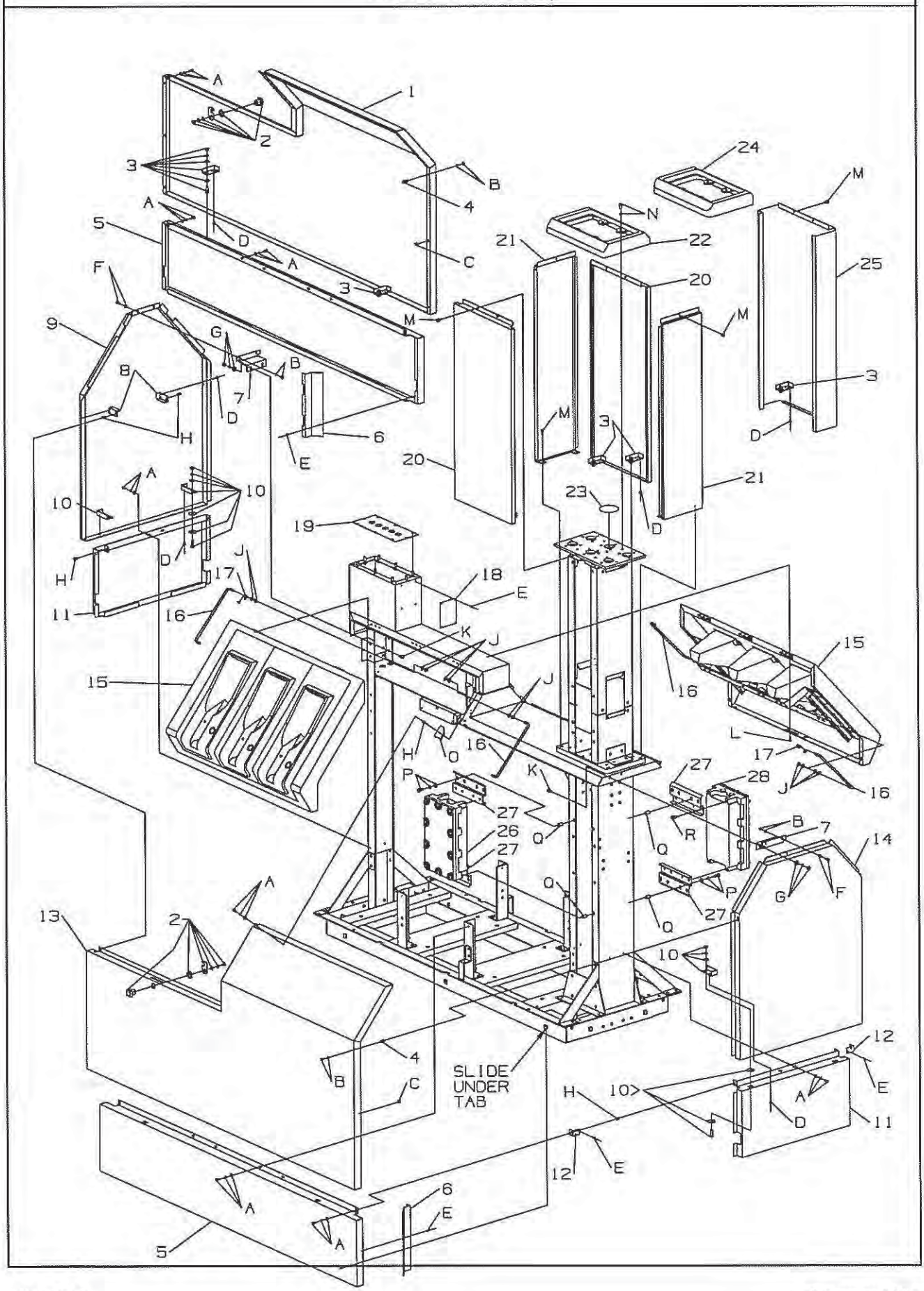

Panel assembly

Item	Part No	Description	Qty
		When ordering spare panel parts please specify oil company and panel colour	
1	.87873	Main panel - rear	1
	.88041	Main panel - rear - Shell V2	1
2	825840	L&F A/CS16/01/3B/NO3-60101	2
		L&F nut	
	.87699	Cam	
		L&F spring washer	
		L&F flat washer	
		L&F screw	
3	.87882	Lower panel fixing bracket	8
	803230	M6 nut	
	804200	M6 spring washer	
	804460	M6 flat washer	
	.85040	Locating pin (GRP panel)	
4	.87915	Panel locating pin - MPD	2
5	.87870	Skirting panel front & rear - Stainless steel	2
	.88044	Skirting panel front & rear - Stainless steel Shell V2	
	.87718	Skirting panel front & rear - Steel	2
	.87967	Skirting panel front & rear - Caltex	2
6	.87896	Hose limiter [optional]	2
7	.87859	End panel mounting bracket - upper	2
8	.87883	Upper panel fixing bracket	2
9	.87880	Main panel end - LH	1
	.88042	Main panel end - LH - Shell V2	1
10	.87882	Lower panel fixing bracket	4
	803230	M6 nut	
	804200	M6 spring washer	
	804460	M6 flat washer	
	804470	M6 fender washer	
	800070	Set screw M6 x 20	
11	.87871	Skirting panel end - Stainless steel	2
11a	.07722	Skirting panel end LPG batchen (not shown)	2
	.88045	Skirting panel end - Stainless steel Shell V2 [105mm]	2
	.87719	Skirting panel end - Steel	2
	.87872	Skirting panel end - Caltex	2
	.07681	Skirting panel end - LPG	2
	.88047	Skirting panel end - LPG Shell V2 [105 mm]	2
12	87887	Skirt fixing bracket	4
		Not in current production	
13	.87872	Main panel - front	1
	.88040	Main panel - front Shell V2	1
14	.87874	Main panel end - RH	1
14a	.88051	Main panel end shell LPG (not shown)	1
	.88043	Main panel end - RH Shell V2	1
15		Holster panel assembly **See page F-9**	2
16	.87894	Holster panel prop	4
17	.87837	Prop spring (holster panel)	2
18	.87369	Name plate - external	1
19	.87738	Head gland mounting plate - V2	1
20	.88012	Column panel front / rear (for use with item 30)	2
21	.88009	Column panel end - std (for use with item 30)	2

Panel assembly

Item	Part No	Description	Qty
22	.87897	Cap bezel casting square (for use with items 28 & 29)	1
23	.87947	Spring pipe blanking disc (2 product only)	2
24	.87921	Cap bezel casting radius (for use with item 17)	1
25	.87879	Column cover - front & back	2
26	.87889	Cable entry junction box assembly	1
26a	.87206	Junction box PCB assembly	1
26b	.87802	Junction box assembly	1
27	.87807	Power supply box mounting bracket	4
28	.87803	Main power supply box assembly	1
28a	.87151	Power supply PCB assembly **See page P-41**	1
28b	.87802	Junction box assembly	1
	.07431	Lighting/comms box assembly - LPG [Not shown] **See page H-37**	1
A	800650	Screw posidrive pan hd M4 x 12	
	804500	Washer internal fan disc M4	
	804410	Washer flat steel M4 x 11 mm OD	
B	803160	Nut full steel M4	
	804500	Washer internal fan disc M4	
C	..PP1369	Casing buffer large	
D	806290	Rivet pop avex 5/32 1661-0512	
E	806270	Rivet pop avex ⅛ 1661-0410	
F	800650	Screw posidrive pan hd M4 x 12	
	804410	Washer flat steel M4 x 11 mm OD	
G	803230	Nut full steel M6	
	804020	Washer internal fan disc M6	
	804460	Washer flat steel M6 x 16 mm	
H	803290	Nutsert M4 9658-0413	
I	—	—	
J	806540	Clip E 5133/25 ¼" (E210)	
	804340	Washer flat ¼ x 20 SWG	
K	800960	Setscrew engineers M6 x 16	
L	800790	Screw brass M4 x 10 CSK hd	
M	802170	Screw tap It HWF 10 x ½" - slot	
N	800070	Setscrew engineers M6 x 20	
	804020	Washer internal fan disc M6	
O	827320	Tape inseal 5495 40 mm x 5 mm	
P	800960	Setscrew engineers M6 x 16	
	804020	Washer internal fan disc M8	
	804460	Washer flat steel M6 x 16 mm	
Q	803590	Nutsert M6 9658-0619	
R	802180	Screw T23 HWF ¼-20 x 20	
29	.87799	Holster Capping panel	1
30	.87875	Main Capping panel	1
31	.87858	C/Cast Mtg bracket	2
32	.87739	Head Mtg Column	1

Holster panel

Holster panel

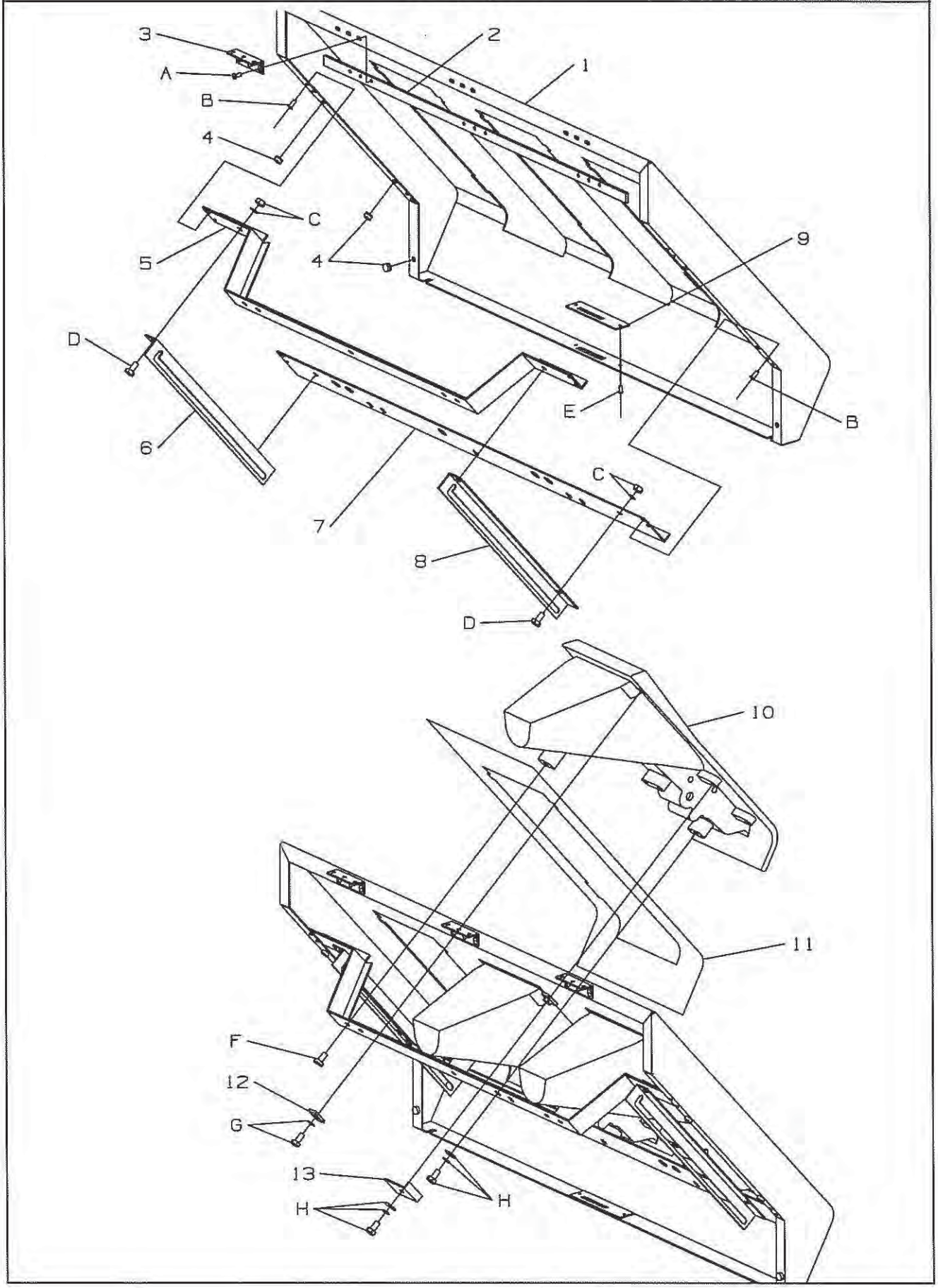

Holster panel

Item	Part No	Description	Qty
1	.87876	Holster Panel - 3 product	1
1a	.87842	Holster Panel - 2 product(offset)	1
1b	.87966	Holster Panel - 2 product	1
		See the following page for diagrams showing the differences between each of the above holster panels	
2	.87827	Hinge mounting bar	1
3	.87828	Hinge-modified (butt 238)	3
4	..PP1369	Casing buffer large (p421)	6
5	.87890	Holster support - top	1
6	.87892	Slide bracket - LH	1
7	.87891	Holster support - bottom	1
8	.87893	Slide bracket - RH	1
9	.87698	Striker plate (main panel)	1
10	.87815	Nozzle Holster	3(2)
11		Decal	
		When ordering Decals, please state Oil company, Fuel grade options required.	
12	.85036	GRP Locating Pin Support	3(2)
13	.87888	Holster fixing bracket	12(8)
	.07650	Nozzle retaining plate assembly [LPG only] (not shown)	
A	800790	Screw brass M4 x 10 CSK Hd	
B	806290	Rivet pop Avex 5/32 1661-0512	
C	803230	Nut full steel M6	
	804020	Washer internal fan disc M6	
D	800060	Setscrew engineers M6 x 12	
E	806270	Rivet pop Avex 1/8 1661-0410	
F	800990	Screw brass M6 x 10 Pan Hd	
G	800060	Setscrew engineers M6 x 12	
	804020	Washer internal fan disc M6	
H	800060	Setscrew engineers M6 x 12	
	804020	Washer internal fan disc M6	
	804460	Washer flat steel M6 x 16 mm	

Holster panel

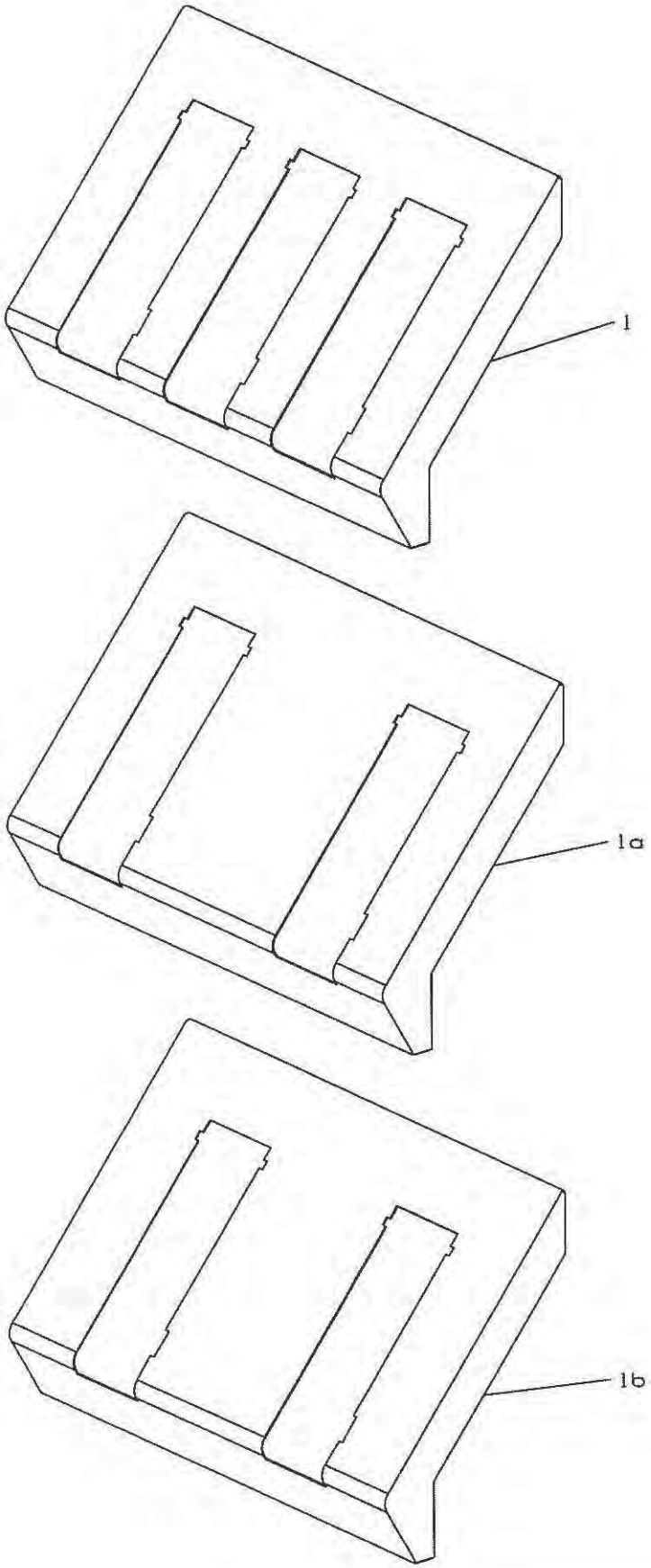

Holster assembly

Holster assembly

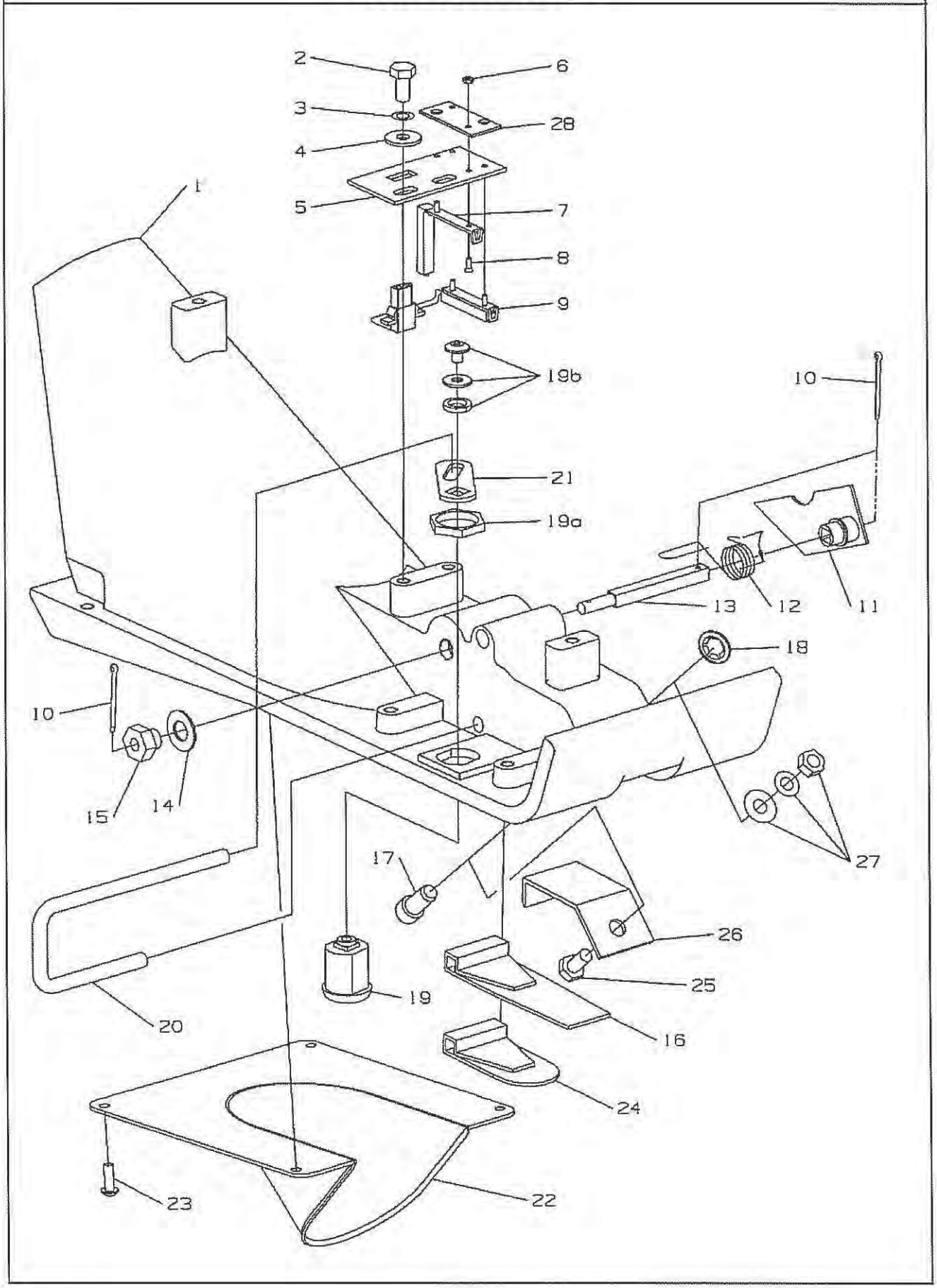

Holster assembly

Item	Part No	Description	Qty
1	.87815	Nozzle holster casting - machined	1
	.07659	Nozzle holster - LPG machined [not shown]	
2	800060	Setscrew engineers M6 x 12	2
3	804020	Washer internal fan disc M6	2
4	804460	Washer flat steel M6 x 16 mm	2
5	.87813	Holster reed switch mounting plate	1
6	803560	Nut full steel M2	4
7		Magnet assembly	
8	801310	Screw steel M2 x 6 CSK hd	4
9	.87357	Nozzle switch magnet assembly (includes item 7)	1
10	806101	Pin cotter 2.5 x 20 mm plated	2
11	.87816	Holster masking arm assembly	1
12	.87819	Holster switch spring	1
13	.87814	Actuating flap spindle	1
14	804310	Washer presspan 9.5 ID x 18.5 OD	1
15	.81055	Actuating spindle bush	1
16	.87808	Nozzle actuating flap	1
	.07653	Nozzle flap - LPG [not shown]	
17	.83700	Nozzle anchor pin - 1000 [Removed for LPG version]	1
18	806060	Washer starlock $^{5}/_{16}$ ID [Removed for LPG version]	1
19	825940	Lock A/CR19/01/3C/N00	1
19a		Lock nut	
19b		Lock spring	
		Lock flat washer	
		Lock screw	
20	.87812	Holster lock bolt	1
21	.87811	Holster cam lock	1
22	.07650	Nozzle retaining plate [LPG only]	1
23	801670	Screw button SKT HD M4 x 12 SS [LPG only]	4
24	.07653	Nozzle flap [LPG only]	1
25	803240	Screw button head	1
26	.07650	Nozzle retaining plate [LPG only]	1
27	803240	Nut full steel M8ZP [LPG only]	1
27a	804030	Washer internal fan disc M6 [LPG only]	1
27b	804440	Washer flat steel M6 x 16mm [LPG only]	1
28	87690	Field plate (Optional)	1

Holster assembly

Internal assembly

Internal assembly

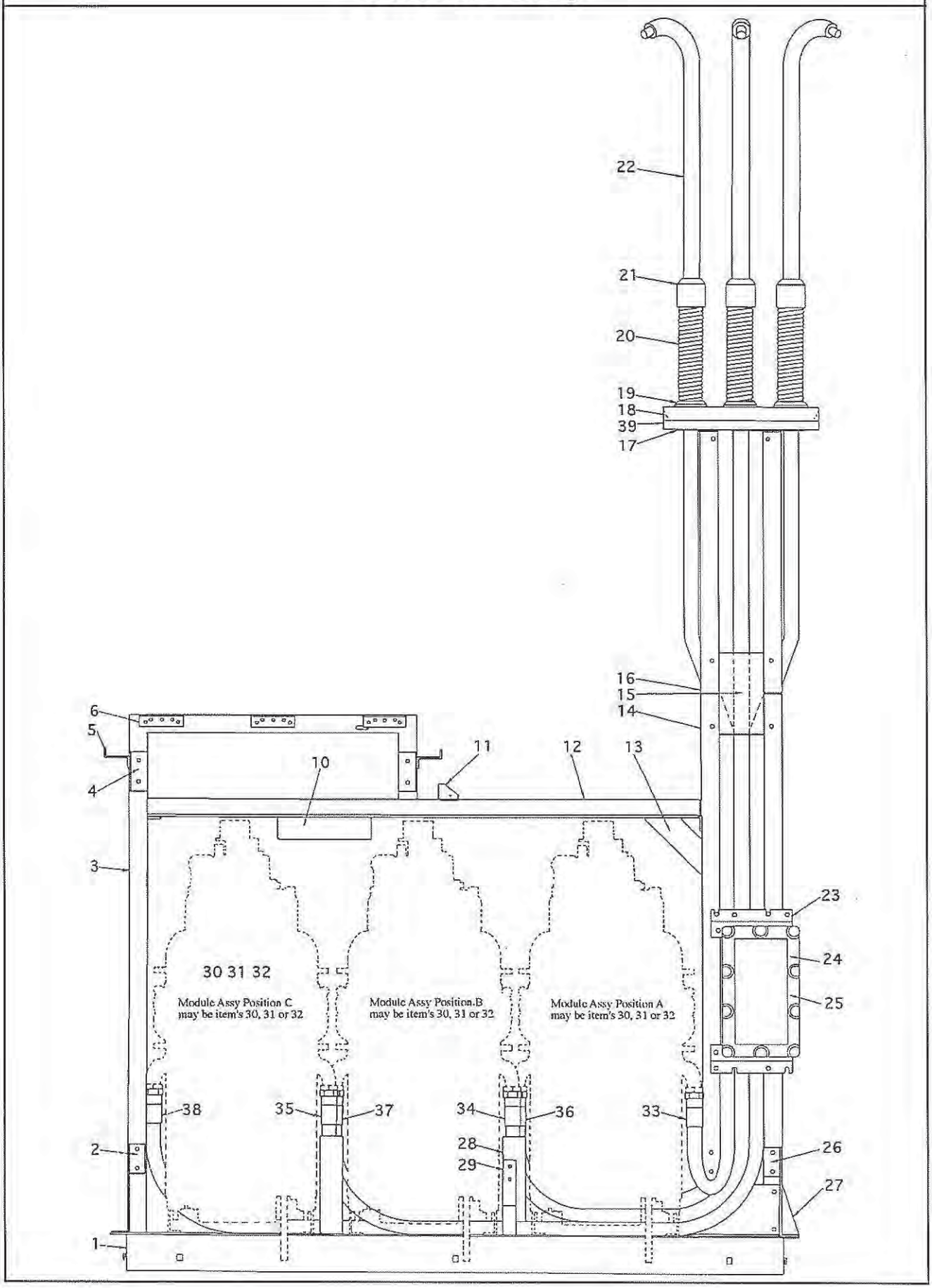

Internal assembly

Item	Part No	Description	Qty
1	.87860	Base assembly	
2	.87846	Column brace - RH	
3	.87865	Head column assembly	1
4	.87895	Prop anchor bracket	
5	.87859	End panel mounting bracket - upper	3
6	.87826	Hinge spacer	6
7	--	--	
8	--	--	
9	--	--	
10	.87789	Logic control box assembly - 8000	1
10a	.87111	Control logic distribution PCB assembly [not shown, within 10]	1
10b	.87310	Control logic cable assembly [not shown within 10]	1
11	.87850	Main capping panel mounting bracket [all models pre December 1st 1994]	1
12	.87861	Cross member assembly	1
13	.87856	Cross member/column brace	2
14	.87857	Column lower	2
15	.87946	Jointing plate	2
16	.87838	Column upper	2
17	.87920	Cap casting	1
18	.87921	Cap bezel casting [for use with panel .87879]	1
19	.87923	Spring anchor cap	6(4)
20	.87929	Spring (pipe)	6(4)
21	.87924	Spring cap	6(4)
22	.87930	Spring pipe assembly - chromed	6(4)
23	.87807	Power supply box mounting bracket	4
24	.87804	Main power supply box assembly	1
24a	.87151	Power supply PCB assembly	1
24b	.44019	Flameproof plug M20	1
24c		Flameproof SAA Certified gland	
24d	.87802	Junction box assembly - no internals	1
24e	.87800	Junction box - MPD	1
24f	.87801	Junction box lid - MPD	1
24g	801220	Setscrew engineers ¼ UNC x 1.25 HT	10
25	87802	Junction box assembly - no internals	1
25a	.44019	Flameproof plug M20	1
25b		Flameproof SAA Certified gland	
26	.87845	Column brace - LH	2
27	.87847	Column tie	2
28	.87848	Panel mounting bracket (base)	4
29	.87863	Hose clamp	3
30	.87500	Pump module assembly- Duo (option)	1
31	.87501	Pump module assembly - Duo, air sense (option)	1
32	.87510	Dispensing module assembly - Duo (option)	1
33	.87984	Internal hose assembly - A/F (2.1 m)	1
34	.87985	Internal hose assembly - B/F (2.42 m)	1
35	.87986	Internal hose assembly - C/F (2.86 m)	1
36	.87987	Internal hose assembly - A/B (2.323 m	1
37	.87988	Internal hose assembly - B/B (2.8 m)	1
38	.87989	Internal hose assembly - C/B (3.17 m)	1
39	.87897	Column bezel casting (square) [for use with panels .88009 & .88012]	

Internal assembly

Internal assembly
- LPG

Internal assembly - LPG

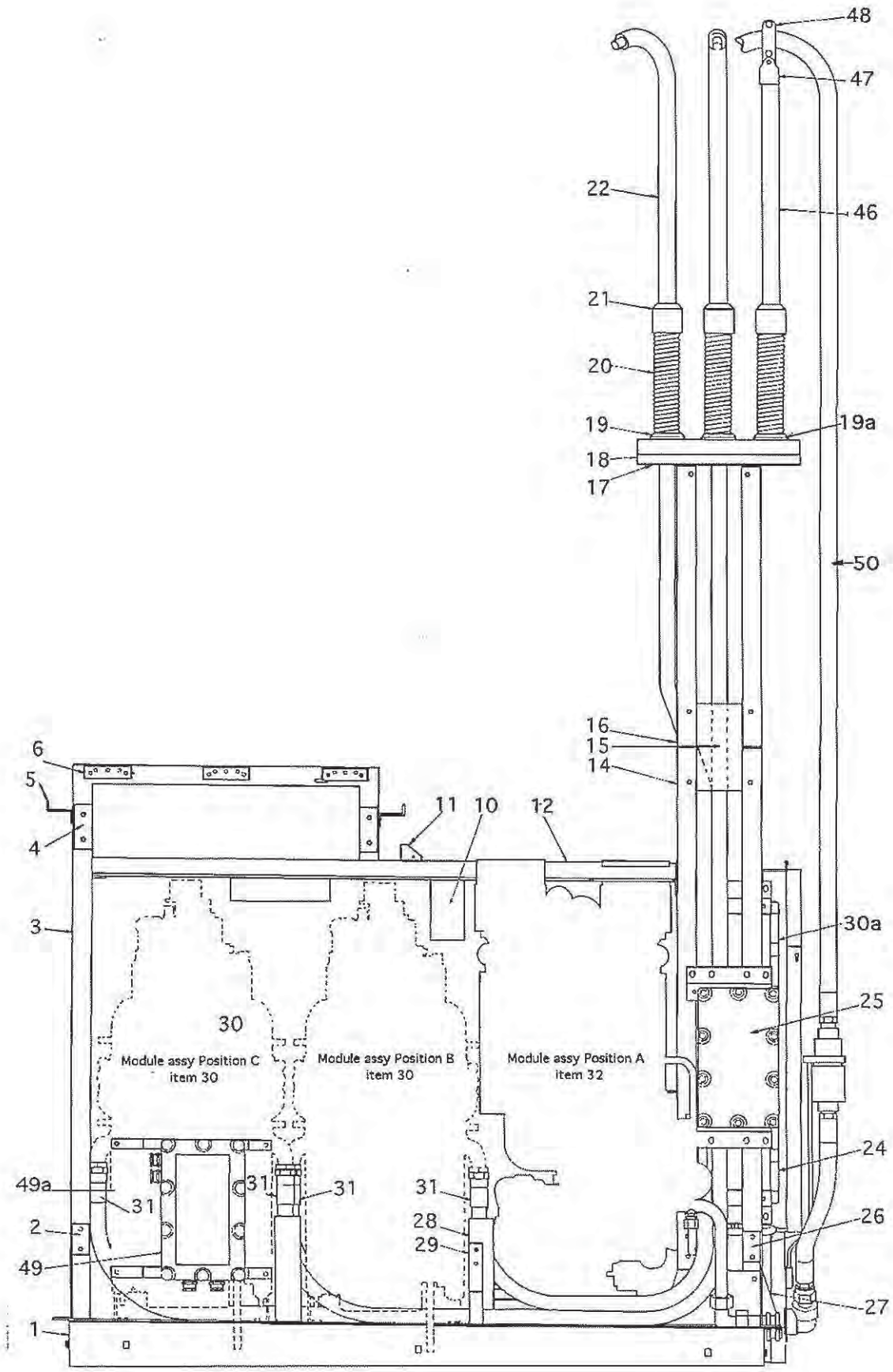

Internal assembly - LPG

Item	Part No	Description	Qty
1	.07550	Base assembly - LPG	1
2	.87846	Column brace - RH	
3	.87865	Head column assembly	1
4	.87895	Prop anchor bracket	
5	.87859	End panel mounting bracket - upper	3
6	.87826	Hinge spacer	6
7	—	—	
8	—	—	
9	—	—	
10	.07430	Input processor assembly - 8000 Hex	1
	.07664	Input CPU box- modified	1
	.07668	CPU box mounting bracket	1
	.83841	Input processor PCB assembly	
11	.87850	Main capping panel mounting bracket (All models pre 1st December 1993)	
12	.87861	Cross member assembly	1
13	—	—	
14	.87857	Column lower	2
15	.87946	Jointing plate	2
16	.87838	Column upper	2
17	.87920	Cap casting	1
18	.87897	Cap bezel casting	1
19	.87923	Spring anchor cap	6(4)
19a	.07676	Spring anchor cap (LPG version)	6(4)
20	.87925	Spring (pipe)	6(4)
21	.87924	Spring cap	6(4)
22	.87930	Spring pipe assembly - chromed	6(4)
23	.87807	Power supply box mounting bracket	4
24	.87803	Main power supply box assembly	1
	.87151	Power supply PCB assembly	1
	.44019	Flameproof plug M20	1
		Flameproof SAA Certified gland	
	.87802	Junction box assembly - no internals	1
	.87800	Junction box - MPD	1
	.87801	Junction box lid - MPD	1
	801220	Setscrew engineers ¼ UNC x 1.25 HT	10
25	.87889	Cable entry junction box assembly	1
	.87802	Junction box assembly - no internals	1
	.87800	Junction box - MPD	1
	.87801	Junction box lid - MPD	1
	801220	Setscrew engineers ¼ UNC x 1.25 HT	10
	.44019	Flameproof plug M20	1
		Flameproof SAA Certified gland	
26	.87845	Column brace - LH	2
27	.87847	Column tie	2
28	.87848	Panel mounting bracket (base)	4
29	.87863	Hose clamp	3
30	.87500	Pump module assembly- Duo (option)	1
	.87501	Pump module assembly - Duo, air sense (option)	1
	.87510	Dispensing module assembly - Duo (option)	1
31	.87985	Internal hose assembly - b/f (2.42 m)	1
	.87986	Internal hose assembly - c/f (2.86 m)	1
	.87988	Internal hose assembly - b/b (2.8 m)	1
	.87989	Internal hose assembly - c/b (3.17 m)	1

Internal assembly - LPG

Item	Part No	Description	Qty
32	820080	LPG module **See page M-33**	1
46	.83731	Spring extension assy	
	.83732	Extension tube	1
	.83733	Bottom cap	1
	.83734	Top cap	1
47	.05020	Hose swivel body	1
	.05019	Hose clamp pivot pin	1
	.07678	Swivel stud	1
	.07679	Spring - swivel stud	1
	804460	Washer flat steel M6 x 16 mm	1
48	.05046	Hose clamp - LH universal	1
	.05047	Hose clamp - RH universal	1
	801100	Capscrew skt ¼ whit x ¾ S/S	2
49	.07431	Lighting/comms box assembly - LPG **See page H-37**	1
49a	.07674	Lighting/comms box assy mtg bracket-MPP-LPG	2
		Items 49 & 49a are situated on the side of the frame for LPG MPP units	
50	.07655	hose assembly - long -LPG **see page S 25**	1
	.07656	Hose assembly - short -LPG **see page S 25**	1

Mains wiring

Mains Wiring

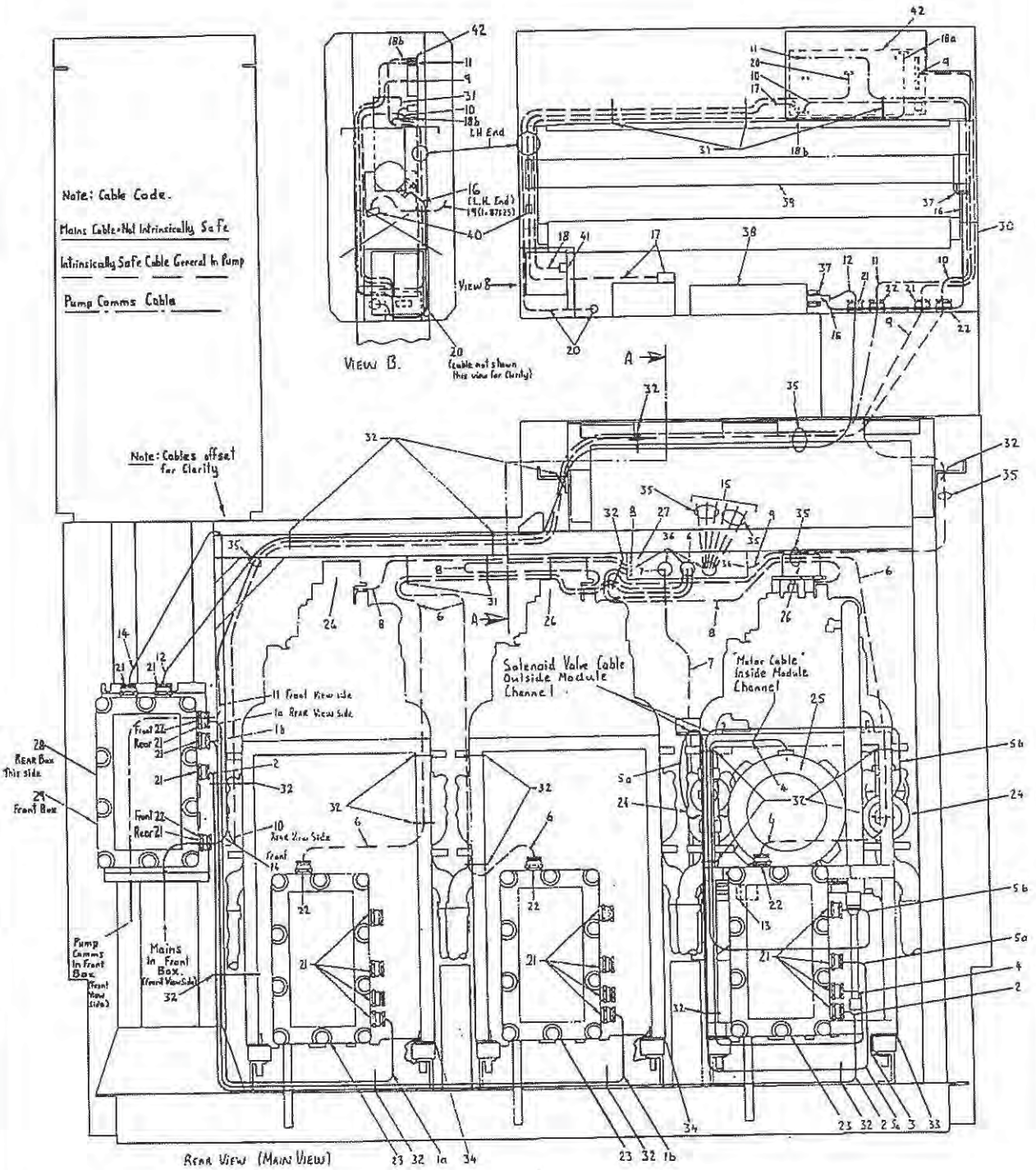

Mains wiring

Item	Part No	Description
1	.87324	AC control power cable - 1.4 m (3W)
2	.87325	AC control power cable - 1.8 m (3W)
3	.87356	Module bonding cable assembly
4		Motor cable
5		Solenoid valve cable
6	.87311	AC control cable assembly
7	.87326	Air sense jumper
8	.87307	Encoder cable assembly
9	.87310	Control logic cable assembly
10	.87316	Processor power cable assembly - 2.9 m
11	.87313	Pump comms cable assembly - 8000
12	.87340	Lighting cable assembly - 8000
13	.87358	Motor bonding cable assembly
14		Mains jumper cable
15	.87315	Nozzle switch cable assembly
16	.87642	Light tube lead assembly
17	.88230	Battery assembly - 8000
18	.87338	Tote cable assembly - 8000
19	.87323	Key switch cable assembly - 8000
20	.87727	Buzzer assembly - 8000
21		Flameproof SAA Certified gland
22		Flameproof SAA Certified gland
23	.87787	AC control box assembly - MPP
24	852530	Soleniod valve - ASCO ¾" **See page S-5**
		Solenoid valve - LPG **See page S-11**
25	821030	Crompark PA8364AKPN/V/NZ750W
26	.87804	Encoder assembly **See page M-37**
27	.87789	Logic control box assembly - 8000
28	.87803	Main power supply box assembly
29	.87802	Junction box assembly - no internals
30		Head cabinet assembly - 8000
31		Wire saddle - Nylon
32		Cable tie - Nylon
33	.87501	Pump module: Preset Duo, Standard speed with Air sense **See page M-5**
34	.87500	Pump module: Preset Duo, Standard speed **See page M-5**
35		Spiral bind - Nylon 66
36		Grommet - Nylon
37		Cable Clamping gland
38	.87644	Lighting assembly - 8000
39	.87641	Light tube assembly **See page H-21, H-25**
40		Microswitch
41	.87221	Tote PCB assembly **See page P-69**
42	.87101	Processor PCB assembly - C/W buzzer **See page P-9**

Mains Wiring

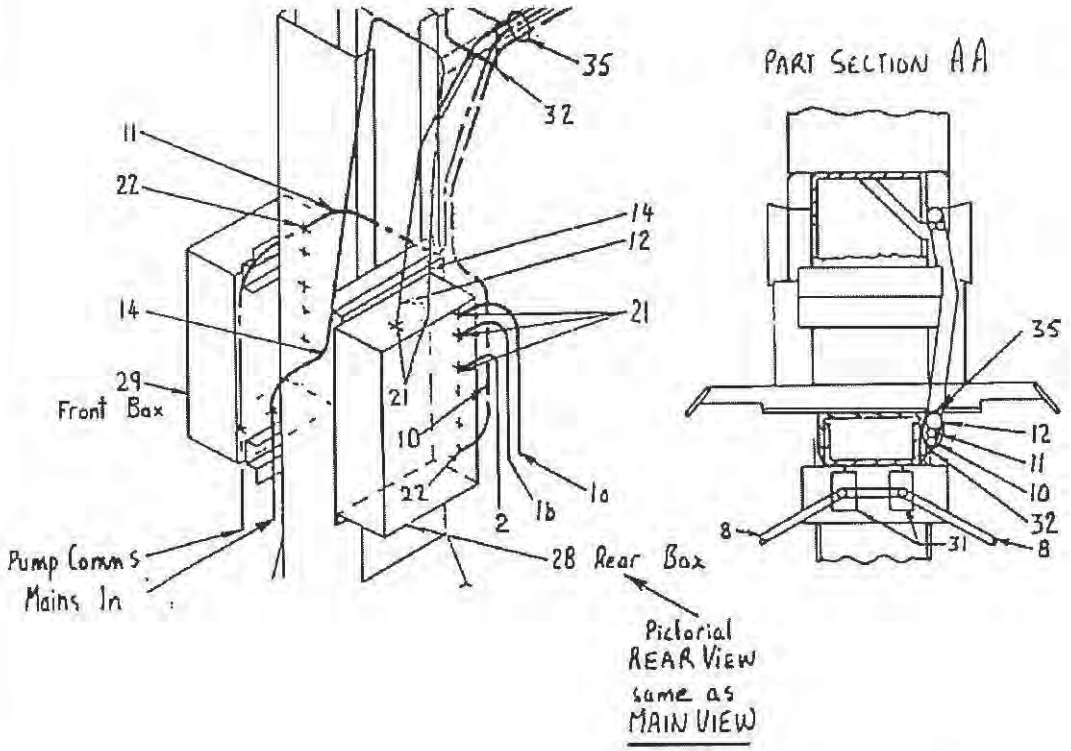

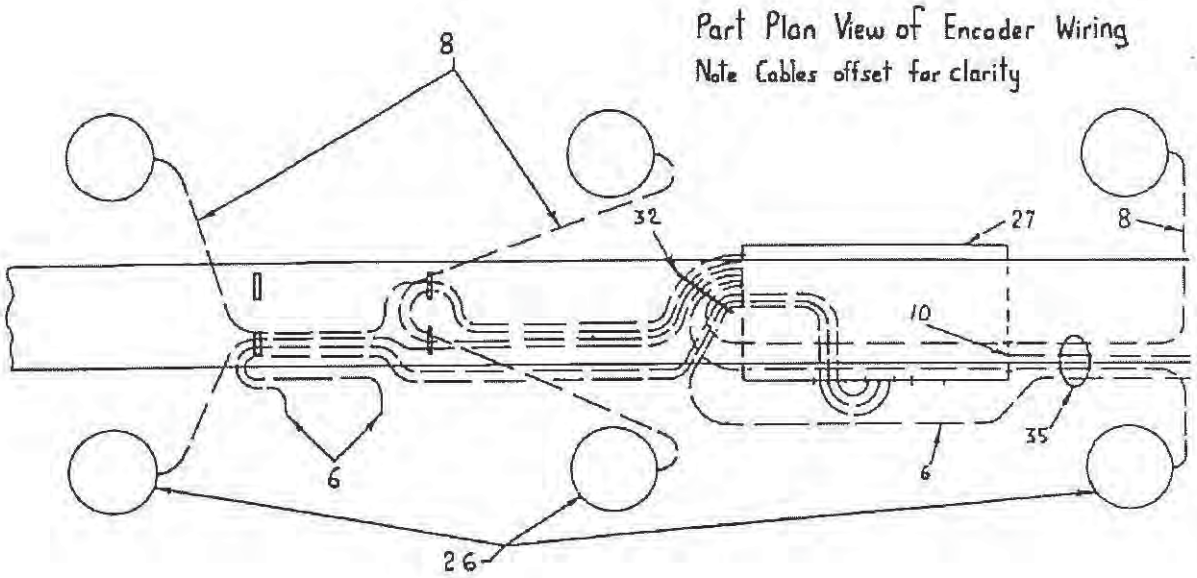

Mains wiring LPG

Mains wiring LPG

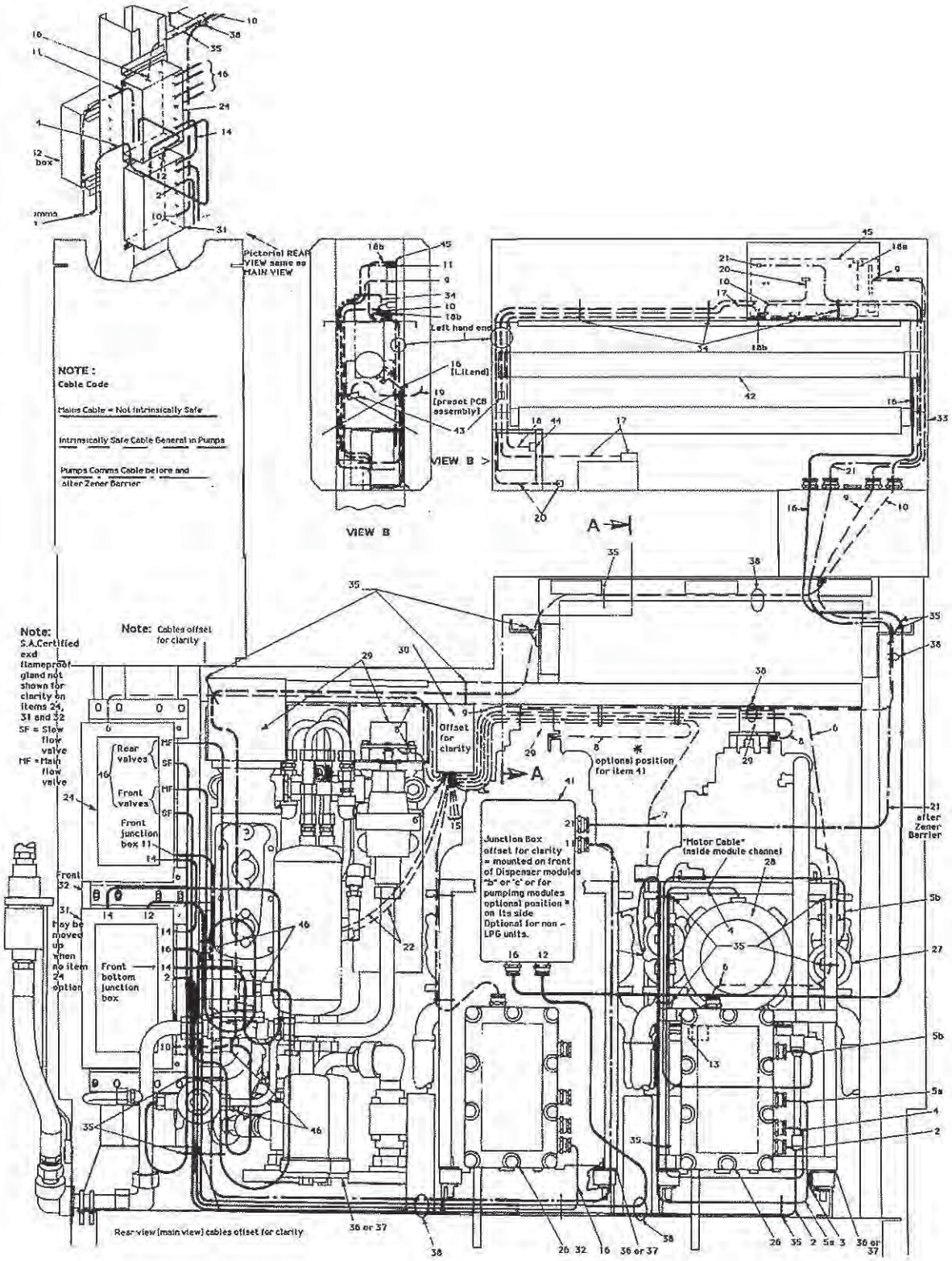

Mains wiring LPG

Item	Part No	Description
1	.87324	AC control power cable - 1.4 m (3W)
2	.87325	AC control power cable - 1.8 m (3W)
3	.87356	Module bonding cable assembly
4		Motor cable [Tied inside module channel]
5a		Solenoid valve cable (left hand)
5b		Solenoid valve cable (right hand)
6	.87311	AC control cable assembly
7	.87326	Air sense jumper
8	.87307	Encoder cable assembly
9	.87310	Control logic cable assembly
10	.87316	Processor power cable assembly - 2.9 m
11	.07205	Cable assembly - comms link
12	.07206	Cable assembly - comms/lighting mains
13	.87358	Motor bonding cable assembly [obscured]
14	.87337	Mains wiring link
15	.87315	Nozzle switch cable assembly
16	.07201	Cable assembly - light lead
17	.88230	Battery assembly - 8000 [including cable]
18	.87338	Tote cable assembly - 8000
19	.87323	Key switch cable assembly - 8000
20	.87727	Buzzer assembly - 8000 [including cable]
21	.07204	Cable assembly - comms link top
22	.07660	Temperature probe assembly - LPG
23		
24	.87790	AC control box assembly MPD [LPG module]
25	823420	Flameproof S A Certified gland [not shown]
	823450	Flameproof S A Certified gland [not shown]
	823455	Flameproof S A Certified gland [not shown].
26	.87787	AC control box assemlby MPD [or item No 24 MPD]
27	852530	Valve T3
28	821040	Motor T3 450 watt
	821030	Motor T3 750 wall
29	.87804	Encoder assembly
30	.07430	Input processor assembly
31	.87803	Main power supply box assembly -
32	.87889	Cable entry junctioin box assembly -
33	.07432	Head cabinet assembly - 8000
34	824110	Wire saddle nylon
35	823650	Cable tie- Nylon 66
36	.07404	S A approved module - LPG optional
37	.87500	S A approved module - pumping
	.87501	S A approved module - pupmimg [air sense]
	.87510	S A approved module - dispensing
38	868440	Spiral bind - nylon 66
39		
40		
41	.07431	Light / comms box assembly
42	.87670	Light assembly [optional]
43	855100	Micro switch
44	.87287	Tote PCB assembly
45	.87101	MPD master processor PCB assembly
46	852750	Valve - LPG T3 [large]

Mains wiring LPG

Heads & Doors

Contents

Head V1 ..... H-1
Head V2 ..... H-5
Door assembly - 2 product H-9
Door assembly - 3 product H-13
Door assembly Hex pump H-17
Light tube assembly H-21
Light tube assembly - Long H-25
Light box wiring H-29
Lighting / comms box H-33
Lighting / comms box - LPG H-37

June 1994

Head V1

Head V1

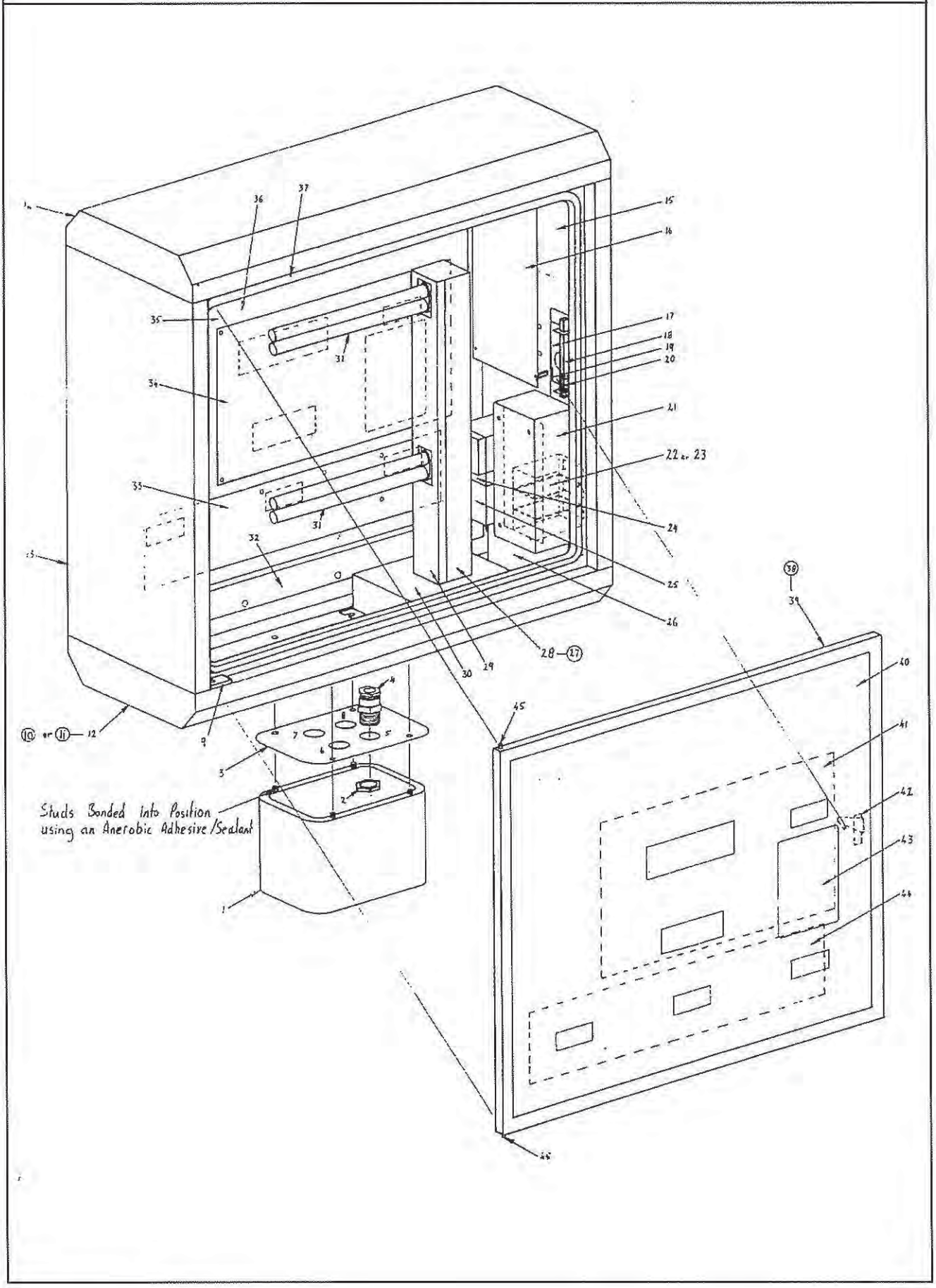
Studs Bonded Into Position using an Anerobic Adhesive/Sealant

Head V1

Item	Part No	Description	Qty
1	.87976	Head mounting column assembly (V1)	1
		Screws	
2	803220	Locknut drury M20	4
3	.87867	Gland mounting plate (V1)	
4		Flameproof SAA Certified gland	4
5	.87316	Processor power cable assembly - 2.9m	1
6	.87320	Light box mains lead	1
7	.87313	Pump comms cable assembly - 8000	1
8	.87310	Control logic cable assembly	1
9	.87971	Hinge plate - bottom	1
10	.87710	Head assembly 3 product standard (V1)	1
11	.87715	Head assembly 2 product (V1)	1
12	.87953	Bottom cap (V1)	1
13	.87949	Cabinet assembly (V1)	1
13a	.87956	Component mounting panel-LH	1
13b	.87959	Component panel mounting bracket	4
14	.87952	Top cap (V1)	1
15	.87955	Component mounting panel-RH	1
15a	.87959	Component panel mounting bracket	4
16	.87101	Processor PCB assembly - c/w buzzer	1
16a	.87305	Cable assembly - display/keyboard/processor - 8000	1
16b	.87321	Tote/processor cable assembly	1
17	.87963	Bolt mounting bracket (V1)	1
17a	825840	L&F A/CS16/01/3B/NO3-60101	1
17b	855320	Microswitch SI-1NCIW3	1
17c	.87323	Key switch cable assembly - 8000 & 9000	1
18	.87965	Bolt (V1)	1
19	806410	Pin tension 3/32" x 1 1/2"	1
20	.87948	Bolt spring (V1)	1
21	.87957	Tote mounting bracket	1
21a	.87919	Tote window	1
21b		Tape	
21c	825940	Lock A/CR19/01/3C/N00	1
21d	.87991	Tote shutter	1
22	.87224	Tote assembly - 3 product	1
22a	.87321	Tote/processor cable assembly	1
23	.87223	Tote assembly - 2 product	1
23a	.87321	Tote/processor cable assembly	1
24	.87958	Battery clamp (V1)	1
25	.87230	Battery assembly	1
26	.87966	Reinforcing plate (V1)	1
27		Lighting assembly	1
28	.87977	Light mounting tray (V1)	1
29	.87978	Tray cover (V1)	1
30	.87979	Ballast/light mounting bracket (V1)	1
30a	852340	Ballast mini Philips BPL 300	2
30b	862470	Amph 44-104-10003-02 housing	1
31	859550	Fluorescent tube PI11W/82	2
31a		Tube mounting socket (Part of item 31)	2
32	.87961	Acrylic clamping bracket	2
32a	.87960	Main fixing bracket	4

Head V1

Item	Part No	Description	Qty
33	.87201	3 product DPL PCB assembly - 8000	1
33a	.87241	2 product DPL PCB assembly - 8000	1
33b		Diffusor DPL display	1
34		MPD Display PCB assembly rear (Mirrored graphics)	1
34a		MPD display PCB assembly front (Rotated graphics)	1
34b		Diffusor dollars/preset display	1
34c		Diffusor litres display	1
35	.87982	Window backing panel (3 product)	1
35a	.87990	Window backing panel (2 product)	1
36		Acrylic window panel preset rear machined (Mirrored graphics)	1
36a		Graphics panel rear preset (Mirrored graphics)	1
36b		Acrylic window panel preset rear machined (Rotated graphics)	1
36c		Graphics panel preset (Rotated graphics)	1
36d	.87190	87190 V1 membrane keypad	1
36e		Acrylic window panel no keypad rear (mirrored graphics)	1
36f		Graphics panel rear non-preset (Mirrored graphics)	1
36g		Acrylic window panel no keypad rear (Rotated graphics)	1
36h		Graphics panel non-preset (Rotated graphics)	1
37	829280	Rubber seal strip- PEC01	1.9
38		Door assembly	1
39	.87954	Door bezel (V1)	1
40		Acrylic window panel front machined (With keypad)	1
40a	.87975	Graphics panel preset front	1
40b		Graphics panel non-preset front	1
40c	.87982	Window backing panel (3 product)	1
40d	.87990	Window backing panel (2 product)	1
41		MPD display PCB assembly front	1
41a		Diffusor dollars/preset displays	1
41b		Diffusor litres display	1
42	.87964	Latch pawl (V1)	1
43	.87190	87190 V1 membrane keypad	1
44	.87201	3 product DPL PCB assembly - 8000	1
44a	.87241	2 product DPL PCB assembly - 8000	1
44b		Diffusor DPL display	1
45		Door hinge pin	2

Head V2

Head V2

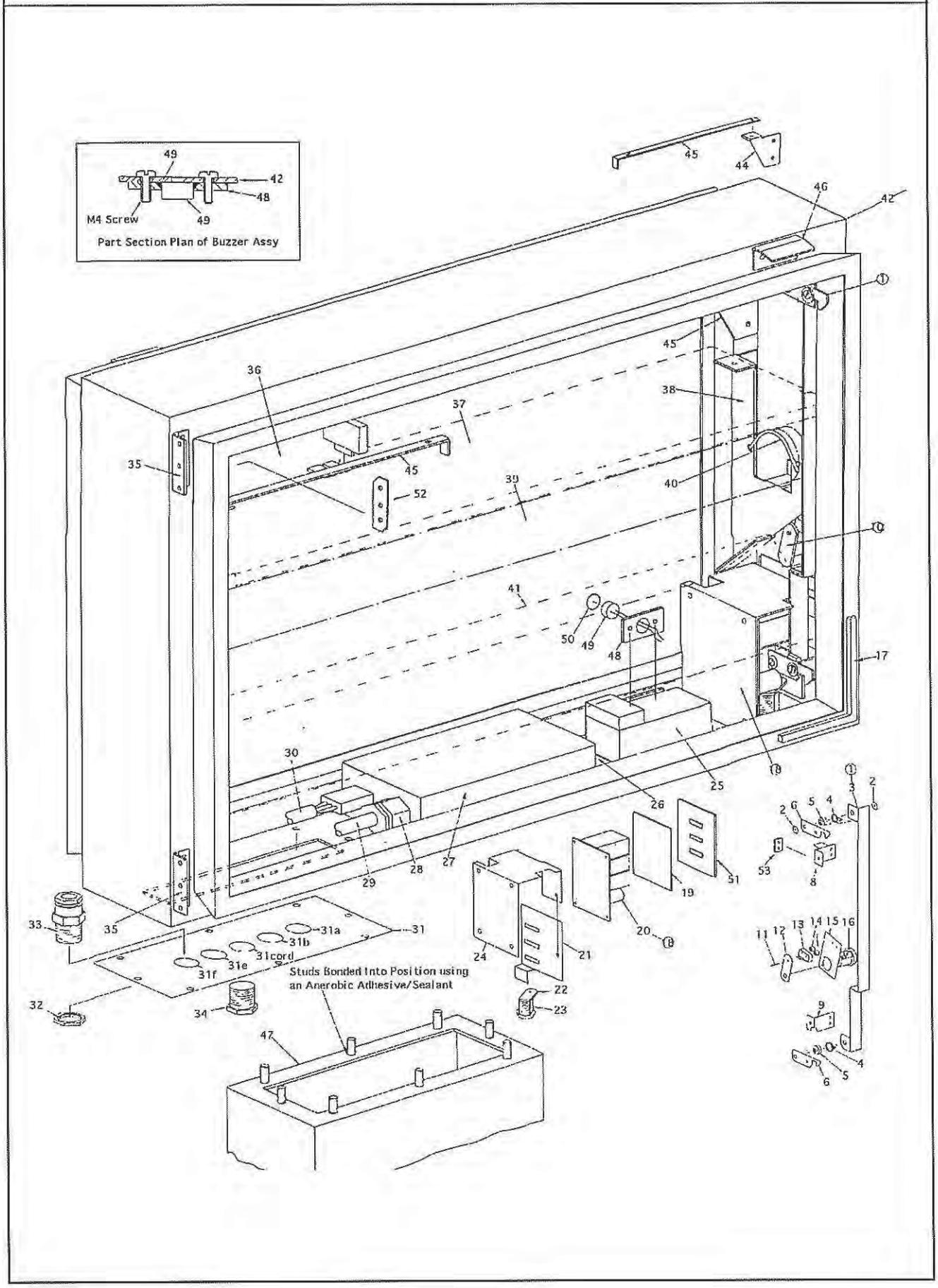
M4 Screw
Part Section Plan of Buzzer Assy
Studs Bonded Into Position using an Anerobic Adhesive/Sealant

Head V2

Item	Part No	Description	Qty
1		Lock sub assembly [includes items 2 to 9]	2
2	804410	Washer flat steel M4 x 11 mm OD	8
3	.87731	Head lock actuator	2
4	.87734	Head lock spring	4
5	.87733	Head lock actuator bush	4
6	.87732	Head lock pawl	4
7	806560	Tension pin 3/16" x ½" **(OBS)**	4
8	.87781	Head lock pawl mounting bracket - top	2
9	.87730	Head lock pawl mounting bracket	2
10		Micro Switch & lock sub assembly [includes items 11 to 16]	1
11	806420	Tension pin 3 mm x 20 mm	1
12	.87735	Head lock cam	1
13	855100	Microswitch SL-1NCLW1	1
14	865850	Spacer 3PC5 (optional) **(OBS)**	2
15	.87758	Head microswitch mounting plate	1
16	825960	Lock L&F A/CR19/01/3C/N00-60101	1
17		Head Seal	
18		Tote & shutter sub assembly	1
19	.87919	Tote window	1
19a	827510	Tape 4945 scotch 12 mm x 1.1 mm	0.0642
20	87288	Tote assy - 2 product (V2)	1
20a	87287	Tote assy - 3 product (V2)	1
21	87749	Tote shutter **(OBS)**	1
22	.87735	Head lock cam **(OBS)**	1
23	825960	Lock L&F A/CR19/01/3C/N00-60101	1
24	.87748	Tote mounting bracket	1
25	.88230	Battery assembly - 8000	1
26	.87750	Battery clamp	1
27	87751	Lighting box [removed for LPG version]	1
27a	852650	Ballast ATCO EC-1 20 watt	1
27b	865940	Starter holder PT3	1
27c	855160	Fluorescent starter 4 - 80 watt	1
27d	.87640	Lighting box assy (includes 27, 27a-c) ref.H-22	1
28		Gland cable fixing	1
29	.87642	Lighting lead 18W - long	1
30	.87340	Lighting cable assembly - 8000	1
31	.87738	Head gland mounting plate - V2	1
31a	.87340	Lighting cable assembly - 8000	1
31b	.87313	Pump comms cable assembly-8000	1
31c			
31e	.87310	Control logic cable assembly	1
31f	.87316	Processor power cable assembly - 2.9 m	1
32	803220	Locknut drury M20	6
33		Flameproof SAA certified gland	4 (5)
34			
35	.87828	Hinge-modified (butt 238)	6
35a	800640	Screw steel CSK M4 x 10	12
36	.87102	MPD Main processor PCB assembly	1

Head V2

Item	Part No	Description	Qty
	.87101	MPD Processor PCB V5 **See page P-9**	1
37	.87783	Top reflector - white	1
38	.87782	Light tube & reflector mounting bracket	2
39	87641	Light tube & wiring assembly	1
39a	865650	Fluorescent 26 dia x 600 x 18 W	1
39b	.18606	Keyboard lighting tube (long)	1
39c	.85308	Light tube end blanking - V2	1
39d	.85307	Light tube end - V2	1
39e	../218	Vix/syn O ring - 218	2
39f	865360	Gland P16 M hawke (nylon)	1
39g	.87642	Light tube lead assembly	1
40	.87753	Light tube clamp spring	2
41	.87784	Bottom reflector - white	1
42	.87740	Head cabinent - 8000 series	1
43	.87620	Head cabinet sub assembly - 8000 (V2)	1
44	.87726	Tie mounting bracket (head)	2
45	.87752	Door tie	2
46	.87788	Door guide	2
47	87739	Head mounting column - V2	1
48	.87728	Buzzer clamping plate	1
49	.87727	Buzzer assembly - 8000	1
50	../110V	Viton O ring -110	1
51	.87659	Gasket - tote window	1
52	.87711	Hinge clamping plate	4
53	.87712	Bracket retainer	2

Door assembly
- 2 product

Door assembly - 2 product

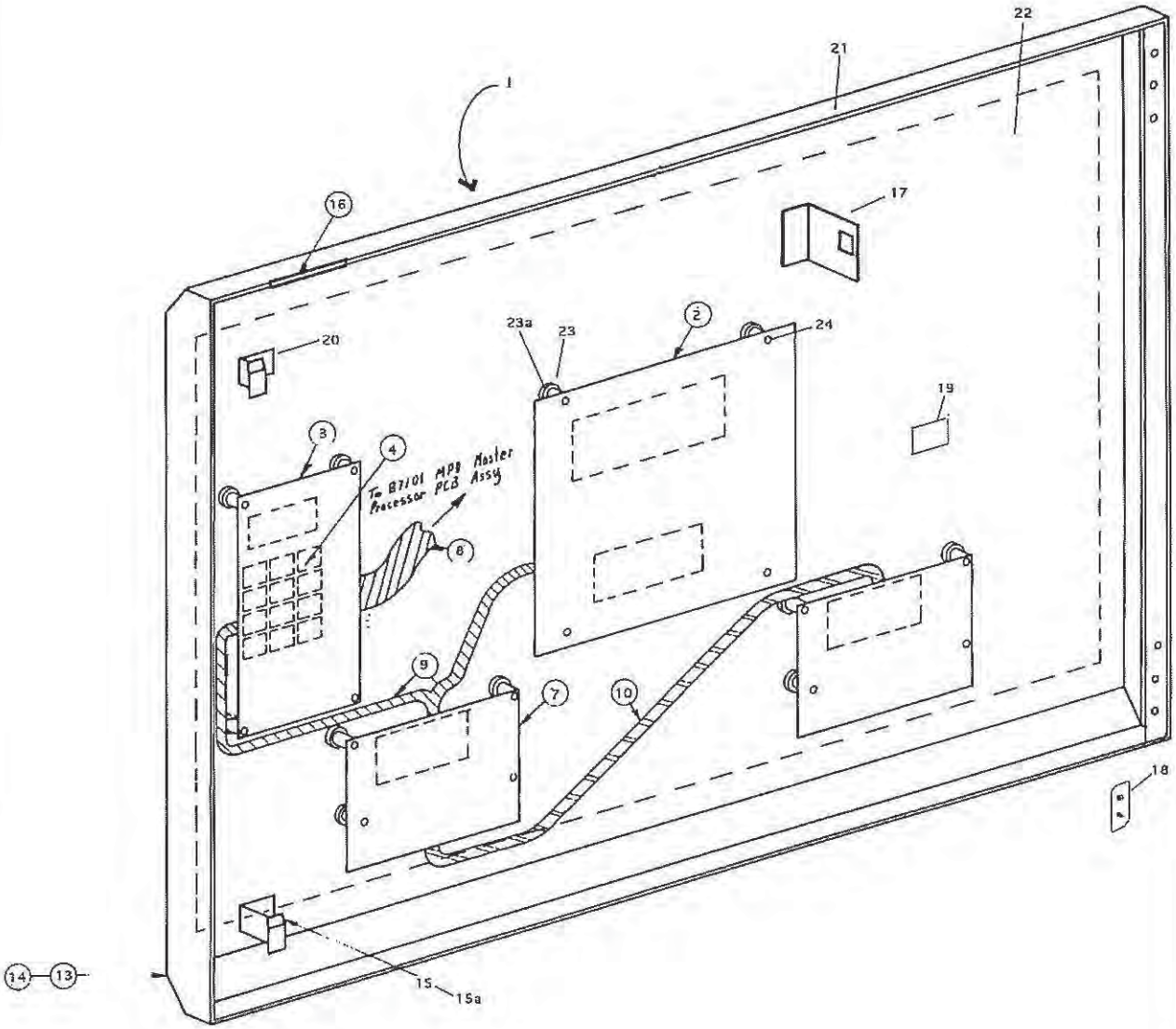

Door assembly - 2 product

Item	Part No	Description	Qty
1	.87969	Graphics panel **When ordering the graphics panel please specify option required.**	1
2	.87276	Dollars & litres PCB assembly	1
3	.87281	Preset PCB assembly - V2	1
4	.87195	87195 V2 membrane keypad	1
4a	.87649	Keyboard mask flap	1
5	—		
6	—		
7	.87271	Single price PCB assembly 0.7"	2
8	.87328	Cable assembly Processor / dispay - 8000	1
9	.87329	Cable assembly - preset/display - 8000	1
10	.87333	Cable assembly - 3 product standard price	1
11	—		
12	—		
13	.87761	Door frame assembly 2 product standard - front (obsolete)	1
14	.87623	Door assembly 2 product standard - front (obsolete)	
15	.87786	Door strike plate 15a .87746 lower catch	1
16	.87825	Door guide strike plate	1
17	.87725	Tie guide	1
18	.87711	Hinge clamp plate	2
19	.88999	Decal	1
20	.87581	Lock catch short	1
21	.87742	Door bezel	1
22	.87759	Face plate 2 product standard - front	1
23	.866750	Spacer nylon M&F SMF6-19 23a Screw .801270 HD-PN5632-06PS	20
24	.803520	Nut dome nylon PNN632C	20

Door assembly - 2 product

Door assembly
- 3 product

Door assembly - 3 product

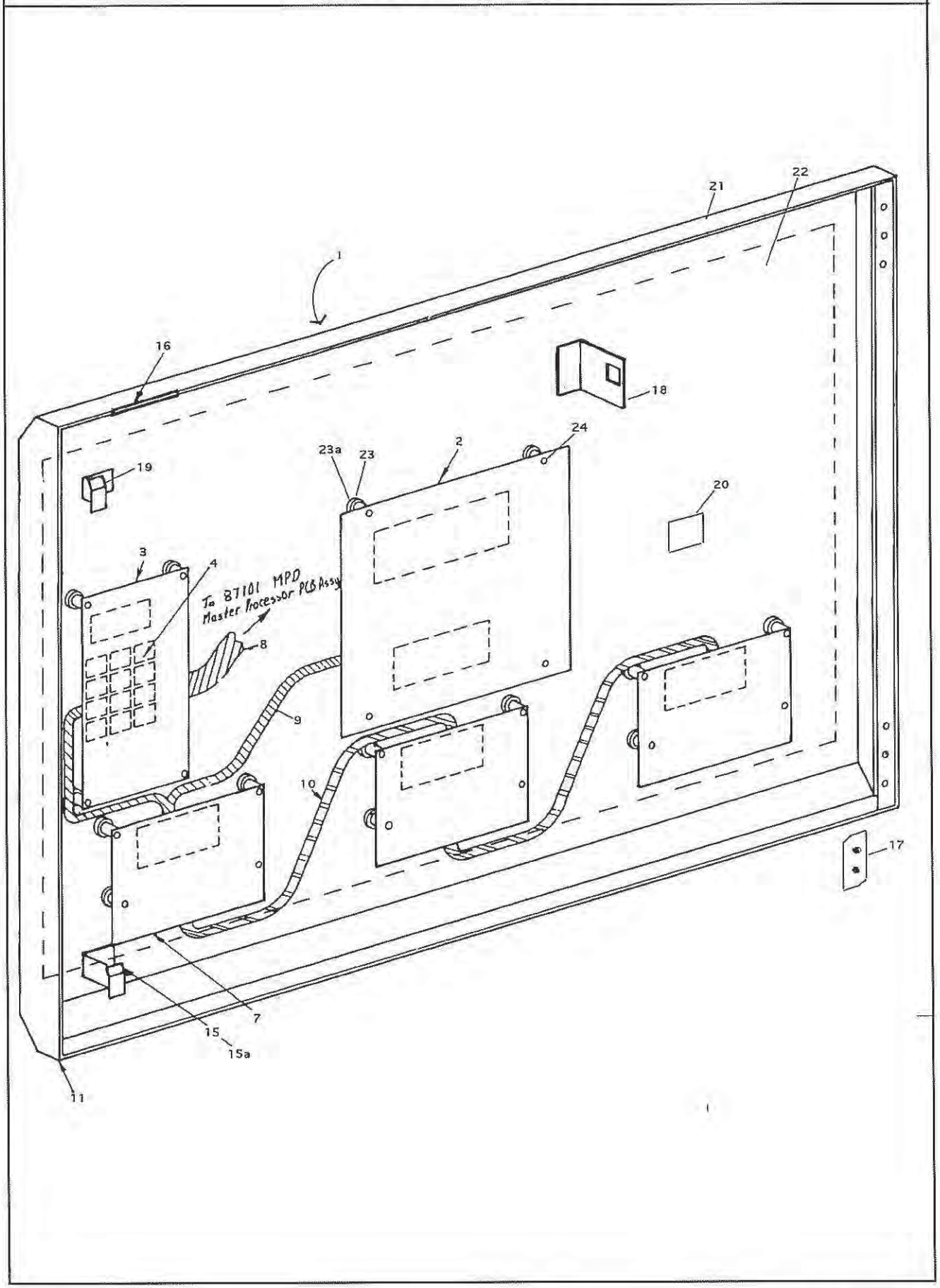

Door assembly - 3 product

Item	Part No	Description	Qty
1	.87975	Graphics panel **When ordering the graphics panel please specify option required.**	1
2	.87276	Dollars & litres PCB assembly	1
3	.87281	Preset PCB assembly - V2	1
4	.87195	87195 V2 membrane keypad	1
4a	.87649	Keyboard mask flap	1
5	—		
6	—		
7	.87271	Single price PCB assembly 0.7"	3
8	.87328	Cable assembly Processor / dispay - 8000	1
9	.87329	Cable assembly - preset/display - 8000	1
10	.87333	Cable assembly - 3 prod standard price	2
11	.87747	Door frame assembly 3 product standard - front (obsolete)	1
12	.87621	Door assembly 3 product standard - front (obsolete)	1
13	—		
14	—		
15	.87786	Door strike plate	2
16	.87825	Door guide strike plate	1
17	.87711	Hinge clamp plate	2
18	.87725	Tie guide	1
19	87581	Lock catch - short	1
20	.88999	Decal	1
21	.87742	Door bezel	1
22	.87744	Face plate 3 prod	1
23	.866750	Spacer nylon M&F SMF6-10 23a. 801220 Screw HD-PN5632-06PS	20
24	.803520	Nut dome nylon PNN632C	20

Door assembly - 3 product

Door assembly
Hex pump

Door assembly - Hex pump

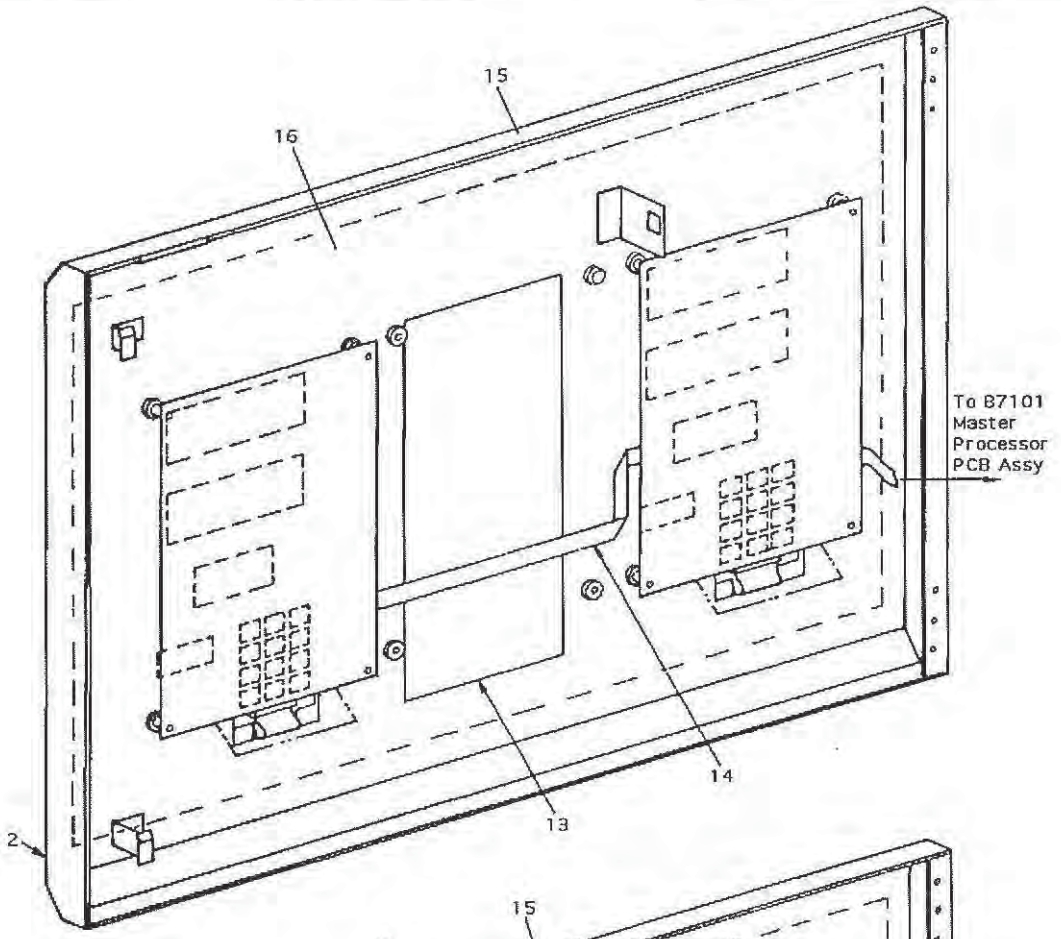

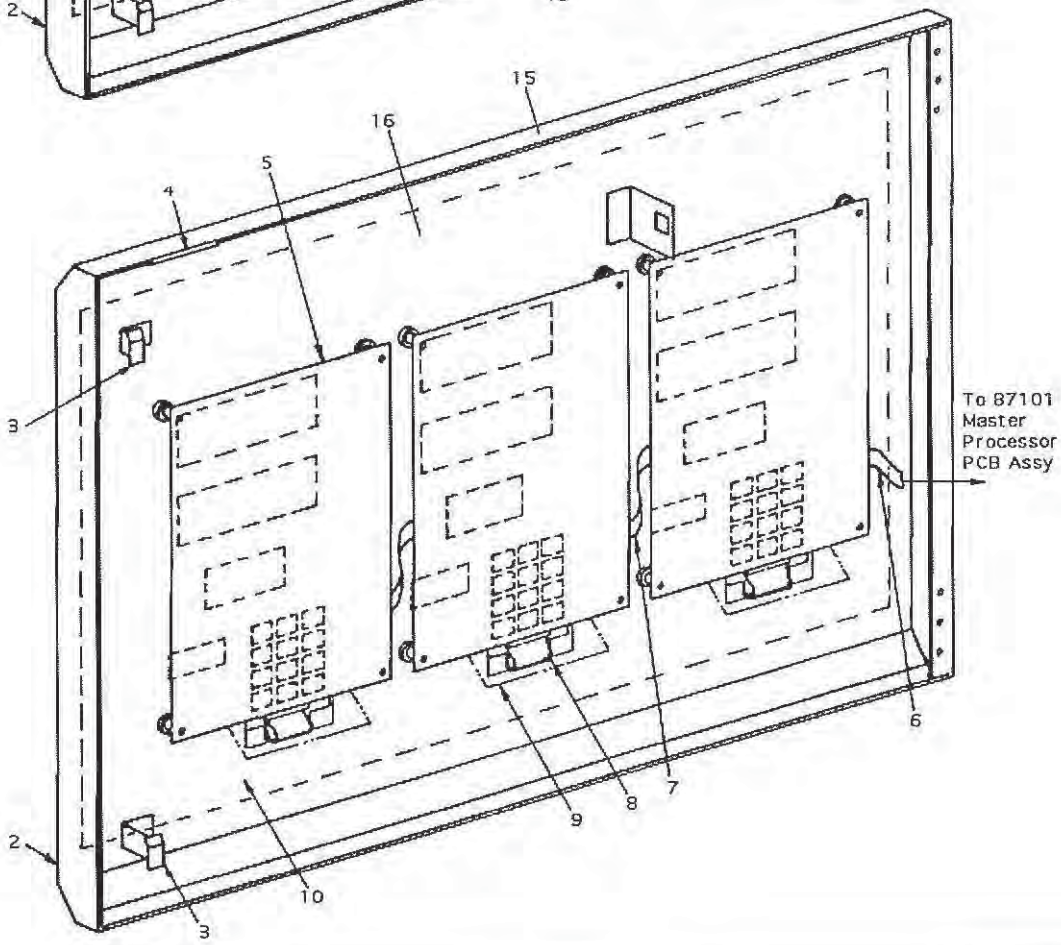

Door assembly - Hex pump

Item	Part No	Description	Qty
1			
2	.07665	Door frame assembly - Hex	
3	.87786	Door strike plate	2
4	.87825	Door guide strike plate	1
5	.87126	MPD display PCB assembly - Hex	3
6	.07202	Cable assembly - CPU -> display Hex	1
7	.07203	Cable assembly - display -> display Hex	2
8	.87195	87195 V3 membrane keypad	3
9	.87649	Keyboard mask flap	1
10		Graphics panel When ordering the graphics panel please specify Oil company, fuel grade and the preset or not preset options required.	
11			
12			
13	.07667	Display masking plate	
14	.87333	Cable assembly - 3 product standard price	2
15	.87742	Door Bezel	1
16	.07666	Door plate	1
	.88999	Decal - part & serial# plate	1
	801270	Screw nylon pan hd - PNS632-06PS	12
	801710	Screw posidrive pan hd M4 x10	4
	803020	Nyloc nut M4	4
	803520	Nut dome nylon - PNN632C	12
	823620	Cable tie 140 mm #15-PCV140	1
	866750	Spacer nylon M+F SMF6-10	12

Door assembly - Hex pump

Light tube assembly

Light tube assembly

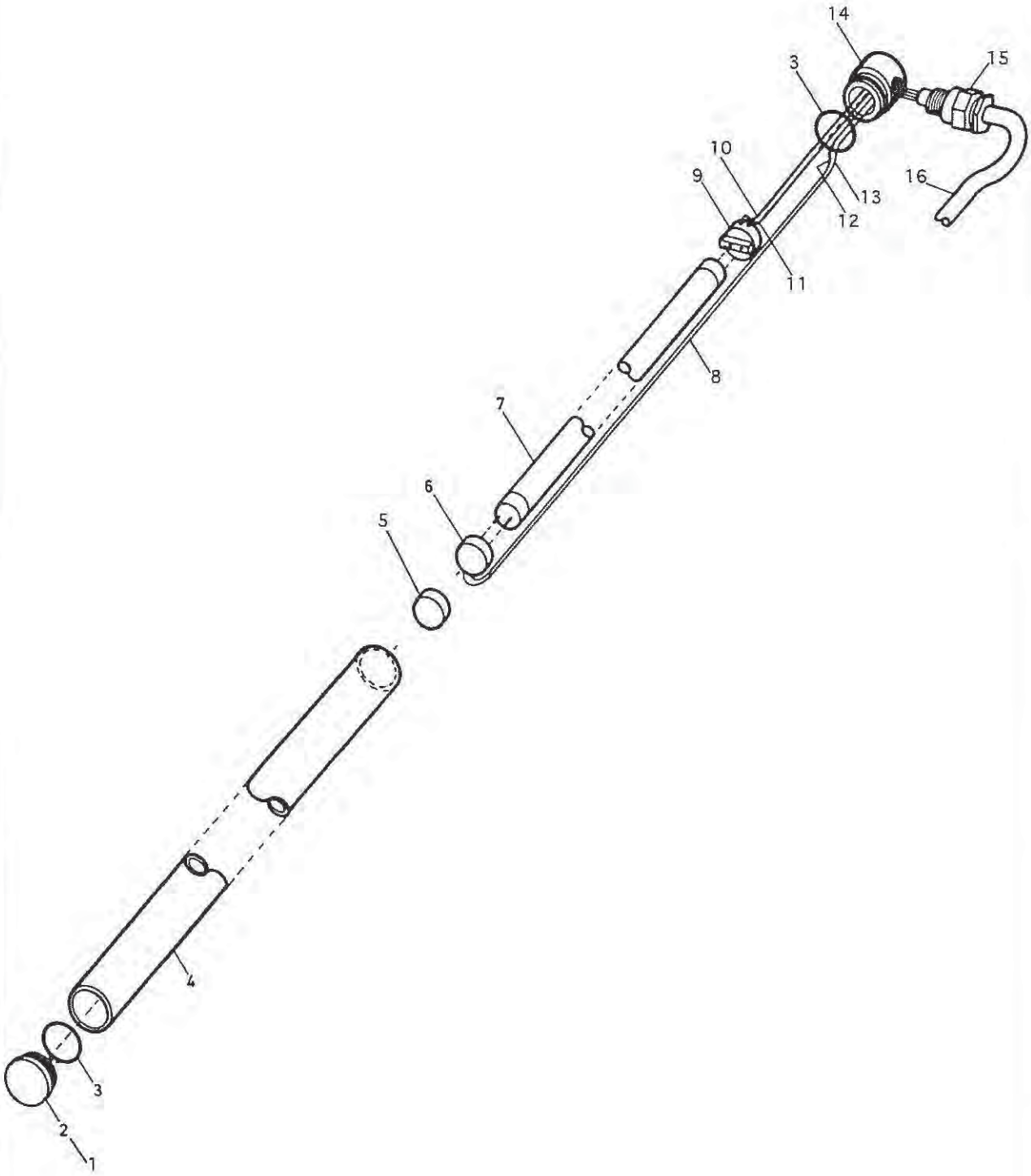

Refer to page H-7, item 27d

Light tube assembly

Item	Part No	Description	Qty
1	.87641	Light tube & wiring assembly	
2	.85308	Light tube end blanking - V2	1
3	../218	Vix/Syn O ring - 218	2
4	.18606	Keyboard lighting tube(long)	1
5	.87697	Light tube spacer	1
6	866100	Lampholder PT32F (fixed end)	1
7	865650	Fluorescent 26 dia x 600 x 18 W	1
8	868218	Wire 0.75 mm 2RSG High temp - red	0.99 m
9	866120	Lampholder PT32P (plunger end)	1
10		Wire Blue (Part of item 16)	0.115 m
11		Wire Red (Part of item 16)	0.115 m
12		Wire White (Part of item 16)	0.07 m
13		Wire Green (Part of item 16)	0.07 m
14	.85307	Light tube end - V2	1
15	865360	Gland P16 m Hawke (nylon)	1
16	.87642	Light tube lead assembly	1

Light tube assembly

Light tube assembly - Long

Light tube assembly - Long

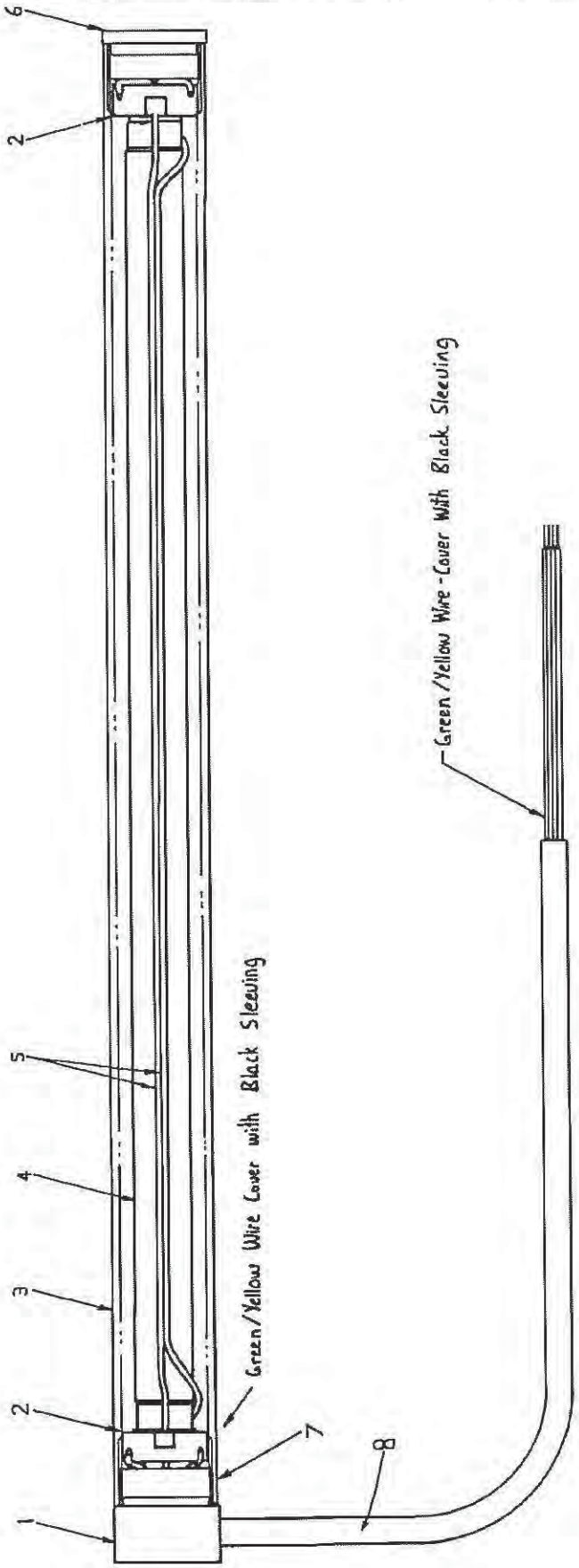

Light tube assembly - Long

Item	Part No	Description	Qty
1	87671	Tube end sub assembly - Potted	1
2	866120	Lamp holder	2
3	.87673	Light tube screwed (long)	1
4	865650	Fluorescent tube 18 W / 33 x 600 mm	1
5	868210	Wire 0.75 mm^2 RSG High temp	2
6	87672	Tube end blanking	1
7	87677	Name plate - light	1
8		0.6 / 1kV HD-90 4 core x 1.5 mm^2 Heavy duty flexible cable	1

Light tube assembly - Long

Light box wiring

Light box wiring

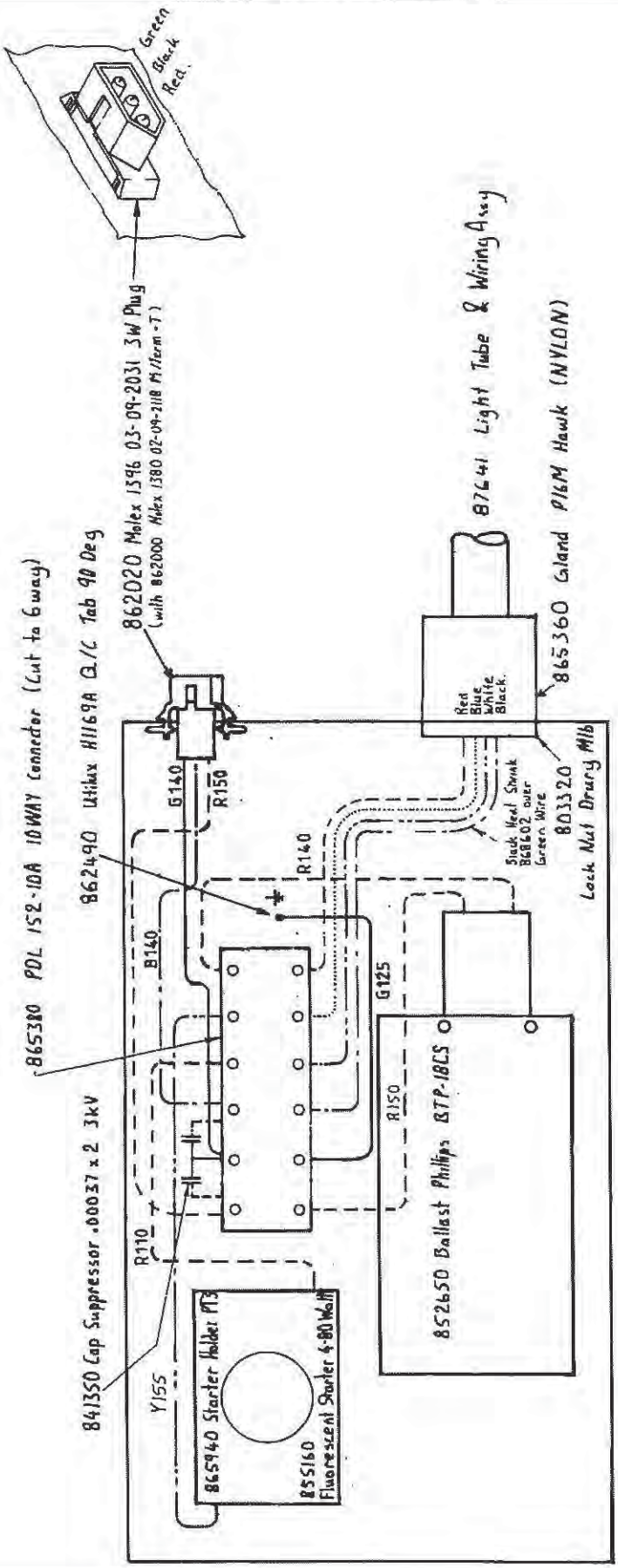

Light box wiring

Key to wire codes used on the diagram:

Green ————————————————
Red — — — — — — — — —
Black - — · — · — · — · — · — · —
Yellow or White — · · — · · — · · —
Blue ·

Light box wiring

Lighting / comms box

Lighting / comms box

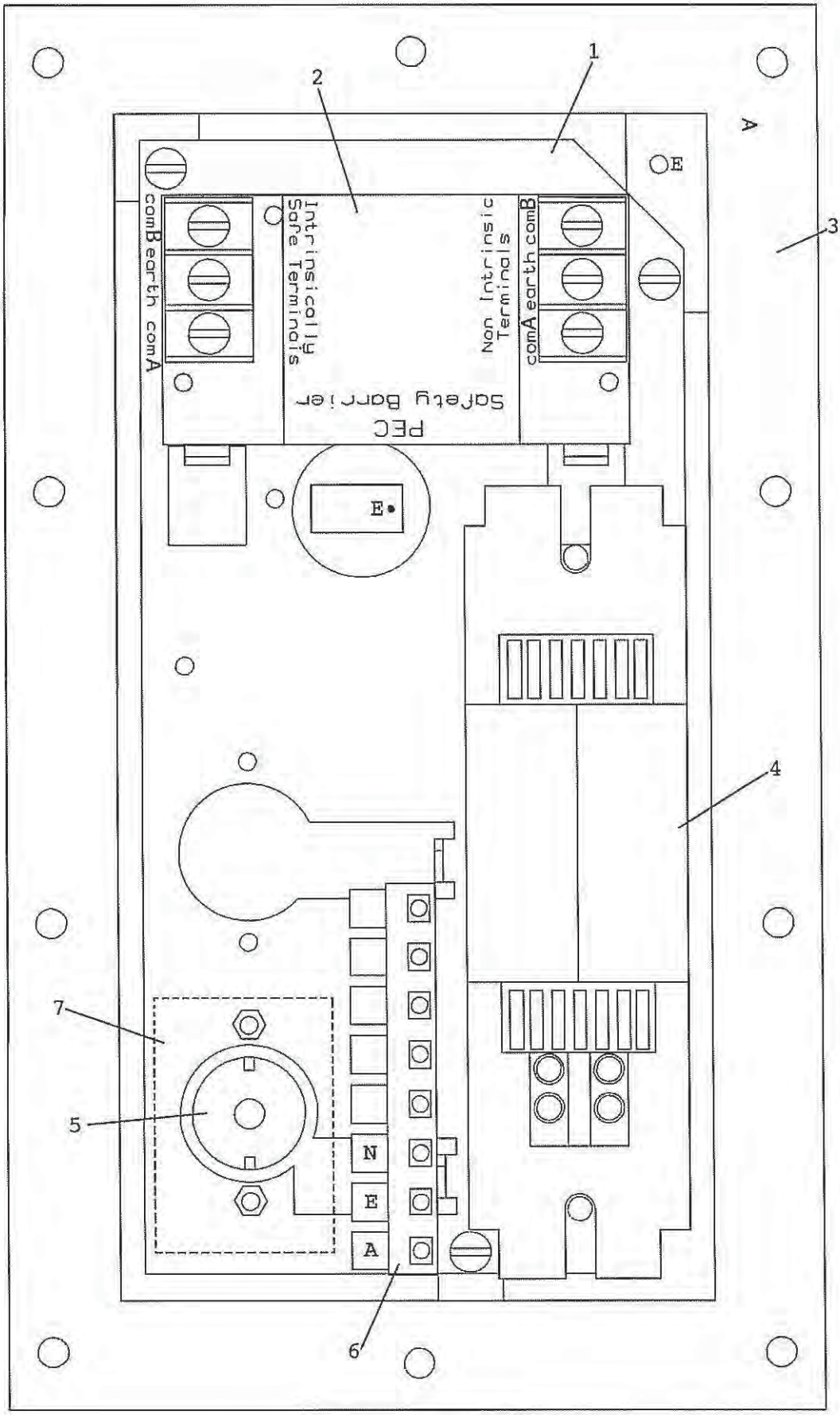

Lighting / comms box

Item	Part No	Description	Qty
	.07431	Lighting/comms box assembly - LPG	
	.07205	Cable assembly - comms link bottom LPG [not shown]	1
1	.07643	Component mounting plate	1
	.44019	Flameproof plug M20 [not shown]	5
2	.87236	Zener barrier PCB assembly - LPG [not shown] **See page P-49**	1
	.87309	AC control earth lead assembly	2
3	.87800	Junction box-MPD	1
	.87801	Junction box lid-MPD [not shown]	1
	823420	Gland flameproof ALCO UFP1A-S [not shown]	1
	823450	Gland flameproof ALCO UFP1C [not shown]	2
	841350	Cap suppressor .00037 x 2 3kV	1
4	852650	Ballast ATCO EC -1 20 watt	1
5	855160	Fluorescent starter 4-80 watt	1
6	865380	PDL 152-10A 10way connector	1
7	865940	Starter holder PT3	1

Lighting / comms box

Lighting / comms box - LPG

Lighting / comms box - LPG

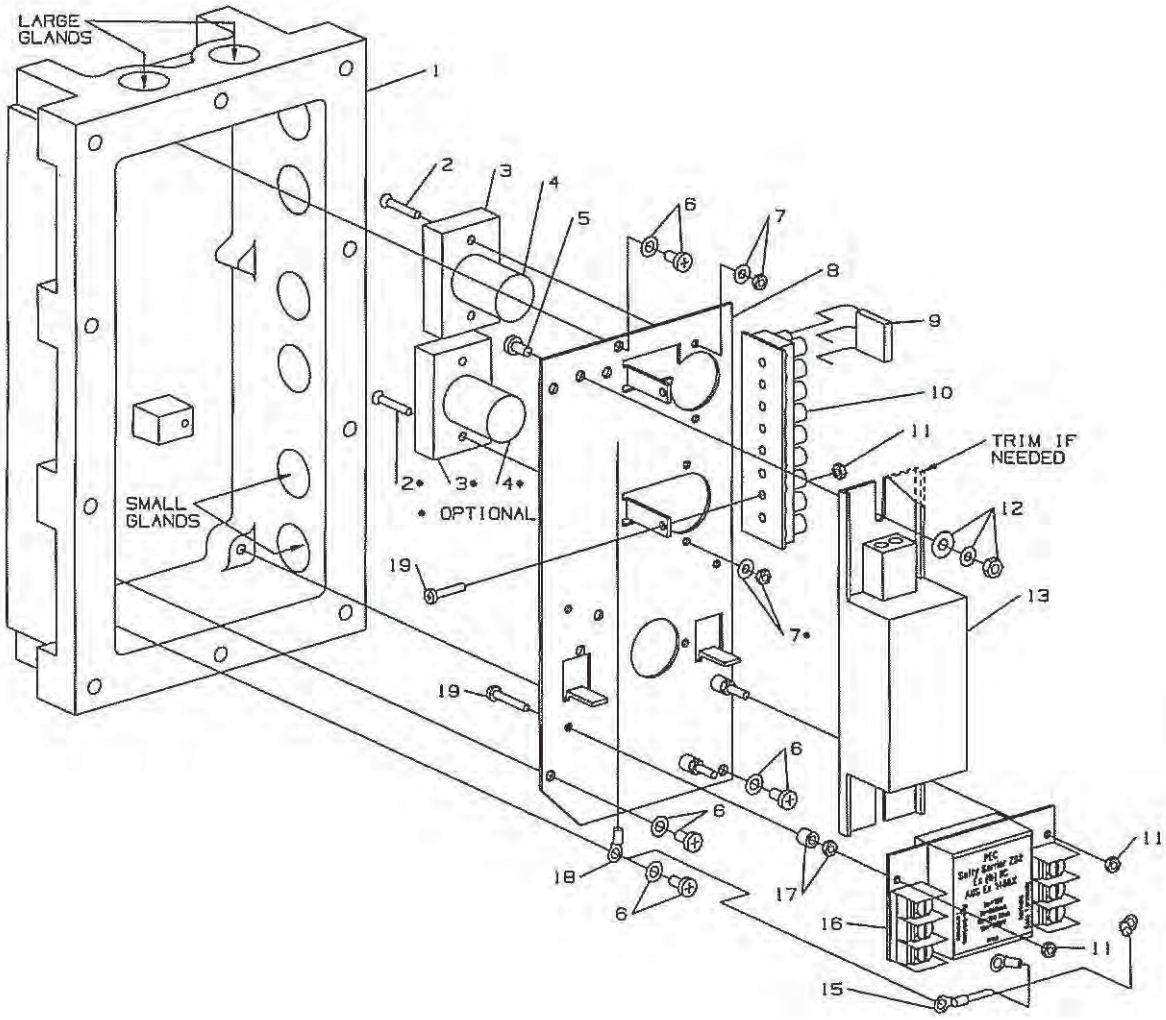

Lighting / comms box - LPG

Item	Part No	Description	Qty
	.07431	Lighting/comms box assembly - LPG	
	.07702	Nameplate - Zener barrier [not shown]	1
	.44019	Flameproof plug M20 [not shown]	1
1	.87800	Junction Box - MPD	1
	.87801	Junction box lid - MPD [not shown]	1
	823420	Gland flameproof - small [not shown]	2
	823450	Gland flameproof - large [not shown]	2
	801220	Setscrew engrs 1/4 UNC x 1.25 HT [not shown]	10
2	800760	Screw steel CSK M3 x 20	2
3	865940	Starter holder PT3	1
4	855160	Fluorescent starter 4-80 watt ["Crompton FS-U series 12"]	1
5	800610	Screw posidrive pan HD M4 x 8	2
6	800610	Screw posidrive pan HD M4 x 8	4
6a	804500	Washer internal fan disc M4	4
7	803140	Nut full steel M3	2
7a	804490	Washer internal fan disc M3	2
8	.07643	Component MTG plate	1
9	841350	Cap suppressor .ooo37 x 2 3kV	1
10	865380	PDL 152 - 10A 9way connector	1
11	803150	Nut full brass M3	2
12	803160	Nut full steel M4	2
12a	814500	Washer internal fan disc M4	2
12b	804410	Washer flat steel M4 x 11mm OD	2
13	852650	Ballast 20 watt [i x light]	1
14			
15	.07207	Cable assy - Zener earth lead	1
15a	.87309	AC Control earth lead - optional	1
16	.87236	Zener barrier PCB assy - LPG	1
17	865860	Spacer 3PC6 HI - Q Polyester	3
17a	803150	Nut full brass M3	3
18	862590	Utilux H4113 crimp lug 4.2mm	1
19	800570	Screw steel pan HD M3 x 164	5

Lighting / comms box - LPG

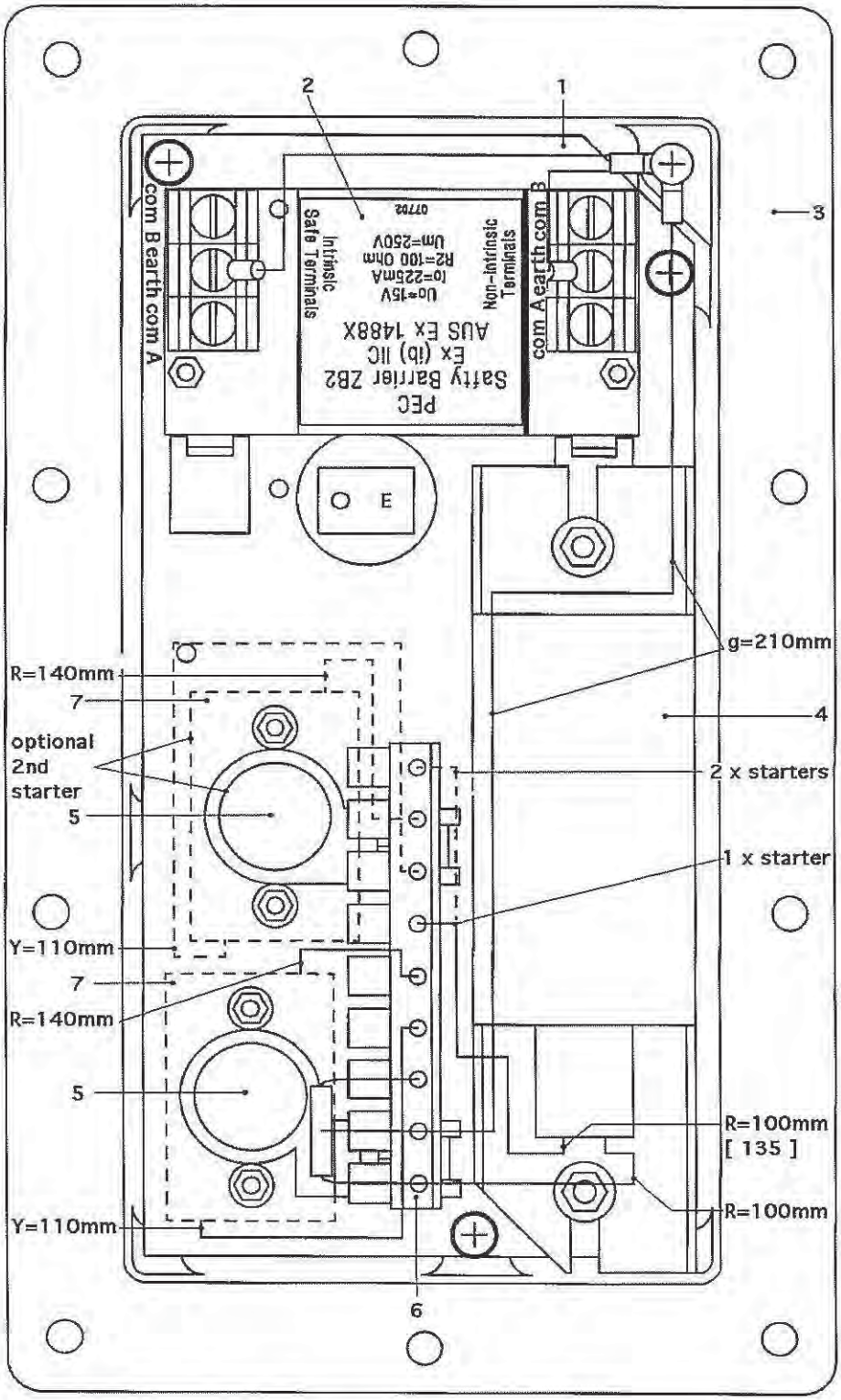

Refer to page H-35
for parts listing of numbered items

Pump modules

Contents

Pump module - Single M-1
Pump module - Duo M-5
Standard speed pump assembly & 450 Watt motor V1 ..... M-9
High power pump assembly & 750 Watt motor V1 ..... M-13
Standard speed pump assembly & 450 Watt motor V2 ..... M-17
High power pump assembly & 750 Watt motor V2 ..... M-21
Dispenser module - Single M-25
Dispenser module - Duo M-29
LPG module M-33
Encoder M-37

30 July 1993

Pump module
- Single

Pump and motor assembly - Single

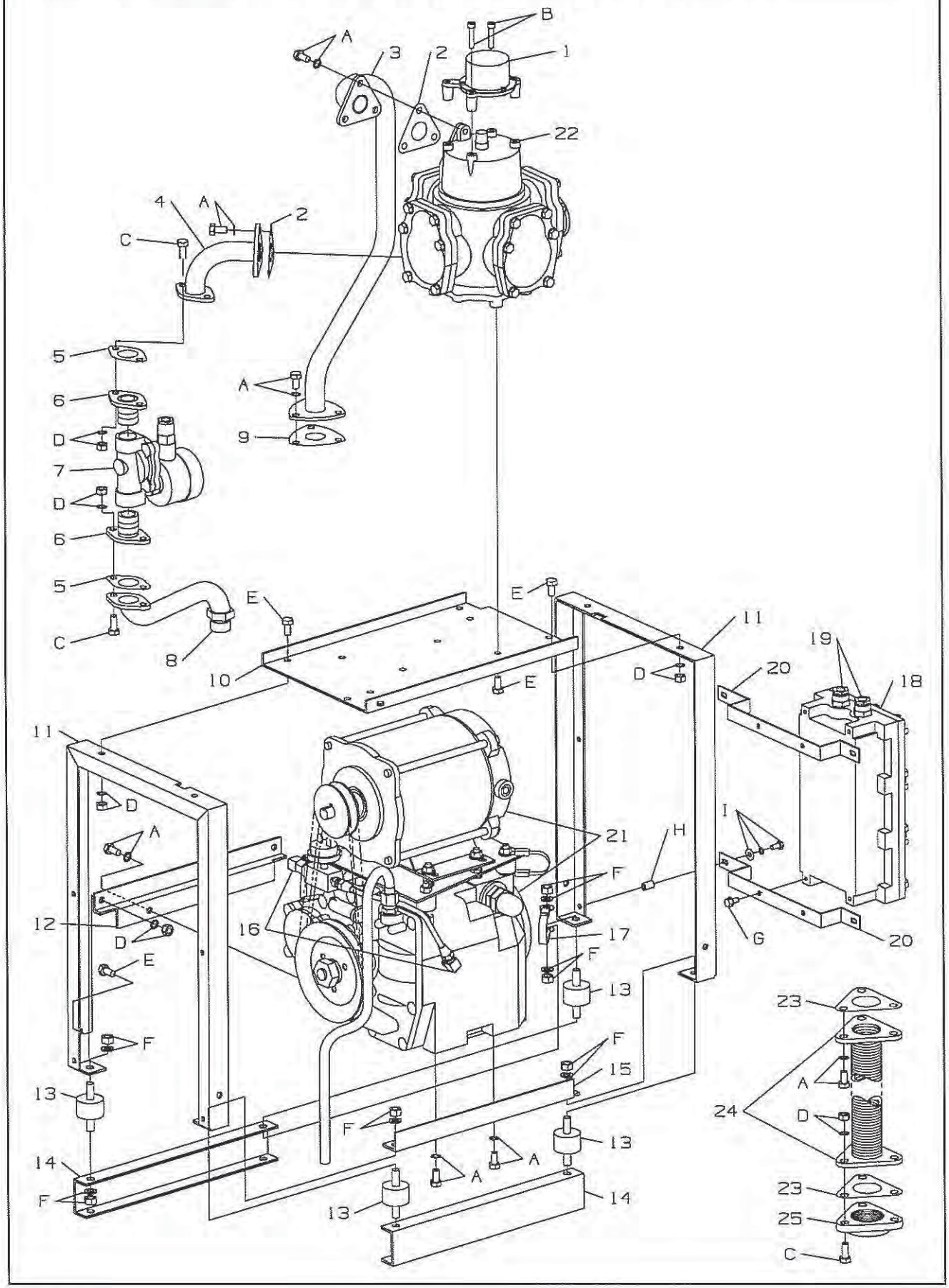

Pump module - Single

Item	Part No	Description	Qty
	.87502	Pump module: Preset Single, High speed [excluding item 16]	
	.87503	Pump module: Preset Single, High speed with Air sense	
	.87504	Pump module: Preset Single, Standard speed [excluding item 16]	
	.87505	Pump module: Preset Single, Standard speed with Air sense	
1	.87804	Encoder assembly **See page M-37**	1
2	.85424	Flange gasket (T) meter 1"	1
3	.87917	Riser pipe assembly - MPP Single	1
4	.87905	Delivery pipe assembly - 8000 & 9000 series MPD & MPP	1
5	..PP269	Discharge gasket 2 clamp holes	2
6	.09011	Delivery pipe extension assembly - preset	2
7	852530	Solenoid valve - ASCO ¾" **See page S-5**	1
8	.87935	Solenoid valve delivery pipe assembly	1
9	.87912	Pump unit gasket	1
10	.87833	Meter mounting plate	1
11	.87830	Module upright	2
12	.87831	Module "Z" bracket	1
13	829900	Mount anti-vibration R224	4
14	.87834	Module rail	2
15	.87832	Module "L" bracket	1
16	.40121	Air sense venturi assembly	1
	.87327	Air sense logic control cable	1
		Parts 40100 & .87327 are removed for Non-Air Sense Pump Modules	
17	.87358	Motor bonding cable	1
18	.87787	AC control box assembly - MPP	1
	.87132	AC control PCB assembly - MPP **See page P-29**	1
	.87802	Junction box assembly - no internals	1
	.87800	Junction box - MPD	1
	.87801	Junction box lid - MPD	1
19		Flameproof SAA Certified Gland [Tolerance to match cable]	4
20	87809	AC control box mounting bracket	2
21		Motor and pump sub assembly - Standard flow pump V1 **See page M-9**	1
		Motor and pump sub assembly - Standard flow pump V2 **See page M-17**	1
		Motor and pump sub assembly - High power pump V1 **See page M-13**	1
		Motor and pump sub assembly - High power pump V2 **See page M-21**	1
22	820030	Flow meter Tatsuno MP-02515-G **See page S-1**	1
23	800/94	Suction pipe flange gasket	2
24	.01692	Flexible connector assembly (stainless steel)	1
24a	.01001	Flexible connector assembly (copper) [obsolete]	1
25	100/419	Suction pipe flange 1.5" BSPT [Aust only]	1

Pump module - Single

Item	Part No	Description	Qty
A	800090	Setscrew engineers M8 x 16	
	804030	Washer internal fan disc M8	
B	800050	Capscrew skt hd M6 x 30	
C	800100	Setscrew engineers M8 x 20	
D	803240	Nut full steel M8	
	804030	Washer internal fan disc M8	
E	800090	Setscrew engineers M8 x 16	
F		Nut [as supplied with item 13]	
	804220	Washer spring M10	
G	802180	Screw T23 hwf ¼-20 x 20	
H	803590	Nutsert M6 9658-0619	
I	800960	Setscrew engineers M6 x 16	
	804200	Washer spring M6	
	804460	Washer flat steel M6 x 16 mm	

Pump module
- Duo

Pump and motor assembly - Duo

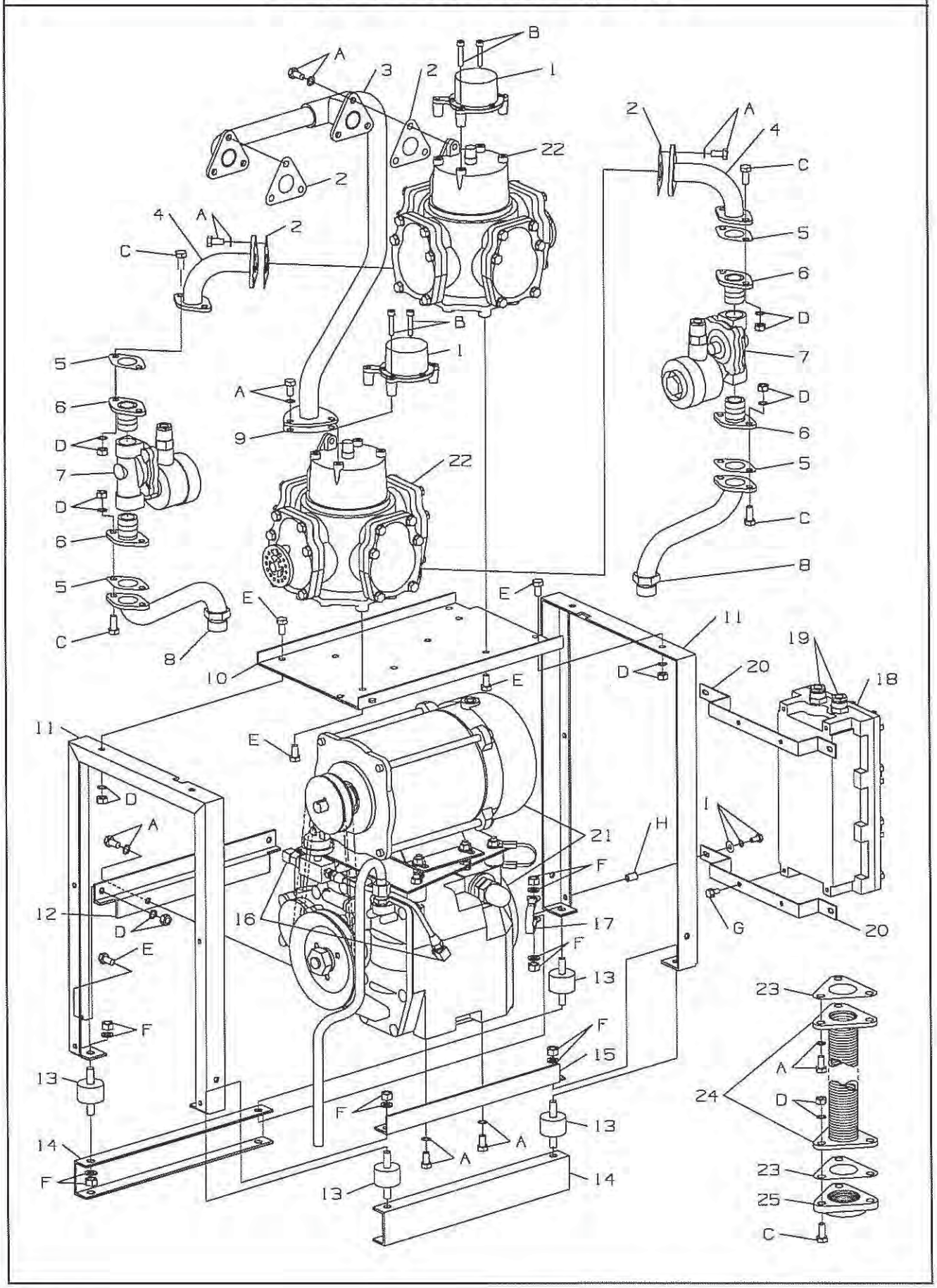

Pump module - duo

Item	Part No	Description	Qty
	87500	Pump module: Preset Duo, Standard speed [excluding item 16]	
	.87501	Pump module: Preset Duo, Standard speed with Air sense	
1	.87804	Encoder assembly **See page M-37**	1
2	.85424	Flange gasket (T) meter 1"	1
3	.87900	Manifold pipe assembly - MPP DUO	1
4	.87905	Delivery pipe assembly - 8000 & 9000 series MPD &MPP	2
5	..PP269	Discharge gasket 2 clamp holes	2
6	.09011	Delivery pipe extension assembly - preset	2
7	852530	Solenoid valve - ASCO ¾" **See page S-5**	1
8	.87935	Solenoid valve delivery pipe assembly	1
9	.87912	Pump unit gasket	1
10	.87833	Meter mounting plate	1
11	.87830	Module upright	2
12	.87831	Module "Z" bracket	1
13	829900	Mount anti-vibration R224 [includes Nut x 2]	4
14	.87834	Module rail	2
15	.87832	Module "L" bracket	1
16	.40121	Air sense venturi assembly	1
	.87327	Air sense logic control cable	1
		Parts 40100 & .87327 are removed for Non-Air Sense Pump Modules	
17	.87358	Motor bonding cable	1
18	.87787	AC control box assembly - MPP 8000 series	1
	.87132	AC control PCB assembly - MPP **See page P-29**	1
	.87802	Junction box assembly - no internals	1
	.87800	Junction box - MPD	1
	.87801	Junction box lid - MPD	1
19		Flameproof SA Certified Gland [tolerance to match cable]	5
20	.87809	AC control box mounting bracket	2
21		Motor and pump sub assembly - High power pump [Duo] V1 **See page M-13**	1
		Motor and pump sub assembly - High power pump [Duo] V2 **See page M-21**	1
22	820030	Flow meter Tatsuno MP-02515-G **See page S-1**	2
23	800/94	Suction pipe flange gasket	2
24	.01692	Flexible connector assembly (stainless steel)	1
24a	.01001	Flexible connector assembly (copper) [obsolete]	1
25	100/419	Suction pipe flange 1.5" BSPT [Aust only]	1
A	800090	Setscrew engineers M8 x 16	
	804030	Washer internal fan disc M8	
B	800050	Capscrew skt hd M6 x 30	
C	800100	Setscrew engineers M8 x 20	
D	803240	Nut full steel M8	
	804030	Washer internal fan disc M8	
E	800090	Setscrew engineers M8 x 16	
F		Nut [as in item 13]	
	804220	Washer spring M10	
G	802180	Screw T23 HWF ¼-20 x 20	
H	803590	Nutsert M6 9658-0619	
I	800960	Setscrew engineers M6 x 16	
	804200	Washer spring M6	
	804460	Washer flat steel M6 x 16 mm	

Pump and motor assembly - Duo

Standard speed pump assembly & 450 Watt motor V1

Standard speed pump assembly & 450 Watt motor V1

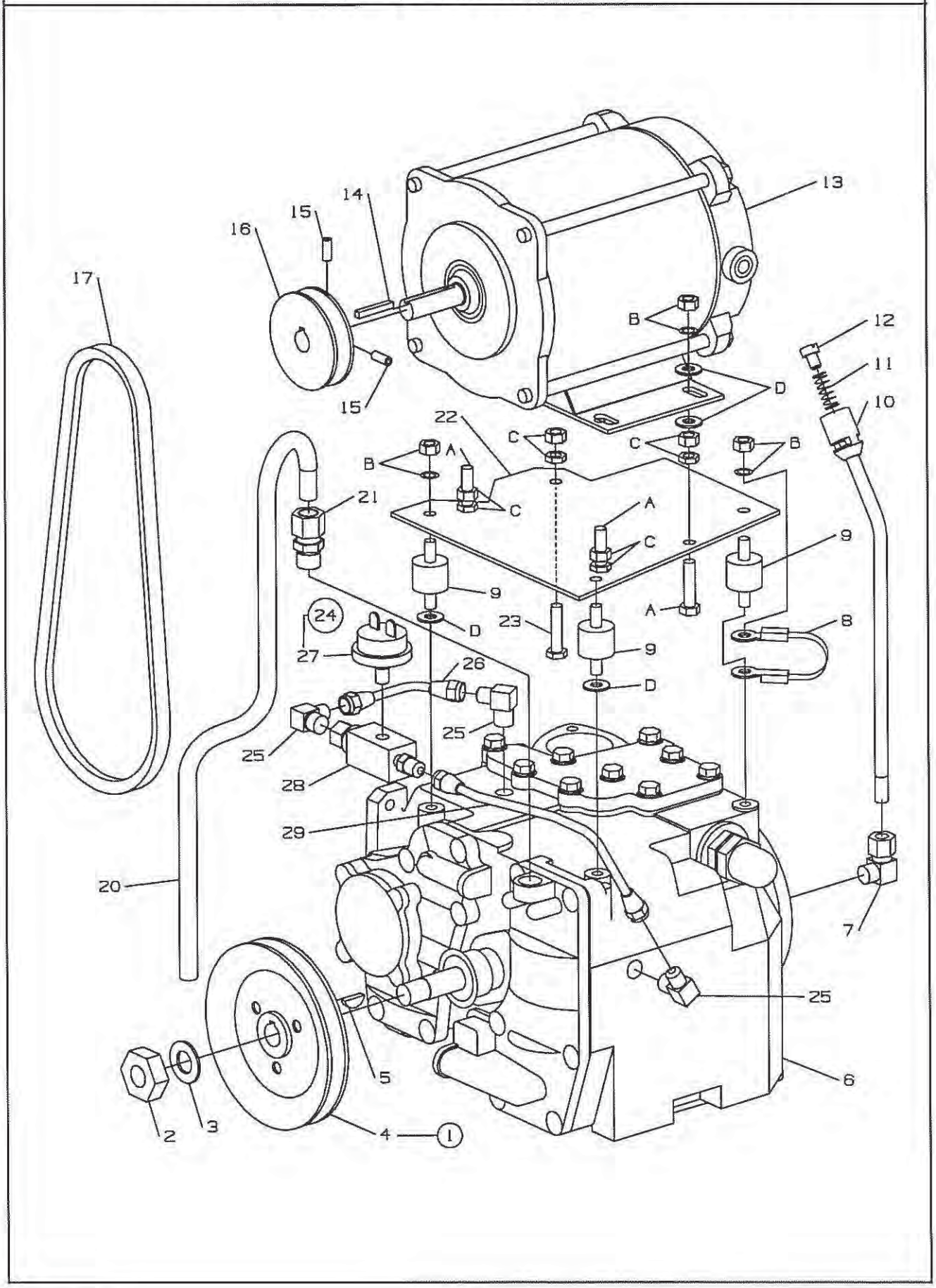

Standard speed pump assembly & 450 Watt motor V1

Item	Part No	Description	Qty
1	822040	Pump pulley kit - Tatsuno [includes items 2 to 5]	1
2		Nut - 160	1
3		Washer plain WSHR/P-160	1
4		Pump pulley Q-703	1
5		Key - 5 mm wide Woodruff	1
6	820060	Pump unit Tatsuno PGS-0257-K **See page S-41**	1
7	823020	Elbow male 69 x 6 x 4	1
8	.87358	Motor bonding cable	1
9	829920	Mount anti-vibration R290-12	3
10	.87936	Test valve assembly	1
11	.83717	Test valve spring	1
12	.87938	Valve	1
13	821040	Crompark PA7304X-T-PN/V/NZ450W	1
14		Key (As supplied with item 15)	
15	801020	Grubscrew 1/4 UNC x 5/8 Knld cup (Pre December 1st 1993)	2
	801000	Grubscrew 1/4 UNC x 5/16 Knld cup (After December 1st 1993)	2
16	.85127	Pulley motor - Standard speed 73 mm dia	1
17	823530	Vee belt A29	1
18	—		
19	—		
20	.87943	Vent pipe - 8000	1
21	823710	Connector male 68 X 8 X 6	1
22	.87835	Motor mounting plate	1
23	.87696	Setscrew machined head M8 x 35	1
24	.40121	Air sense venturi assembly [includes items 25 to 29]	1
		Optional for Air sense	
25	823180	Elbow male 49 x 4 x 4	3
26	.40124	Purge control tube assembly - Mk3	1
27	855270	Vacuum switch M -4080 x 17Hg	1
28	.40100	Air sense venturi sub assembly	1
29	.40123	Pressure chamber tube assembly - Mk3	1
A	800130	Setscrew engineers M8 x 35	
B	803240	Nut full steel M8	
	804030	Washer internal fan disc M8	
C	803620	Halfnut M8	
	803240	Nut full steel M8	
D	804090	Washer flat steel 5/16 ID x 3/4 OD	

Standard speed pump assembly & 450 Watt motor V1

High power pump assembly & 750 Watt motor V1

High power pump assembly & 750 Watt motor V1

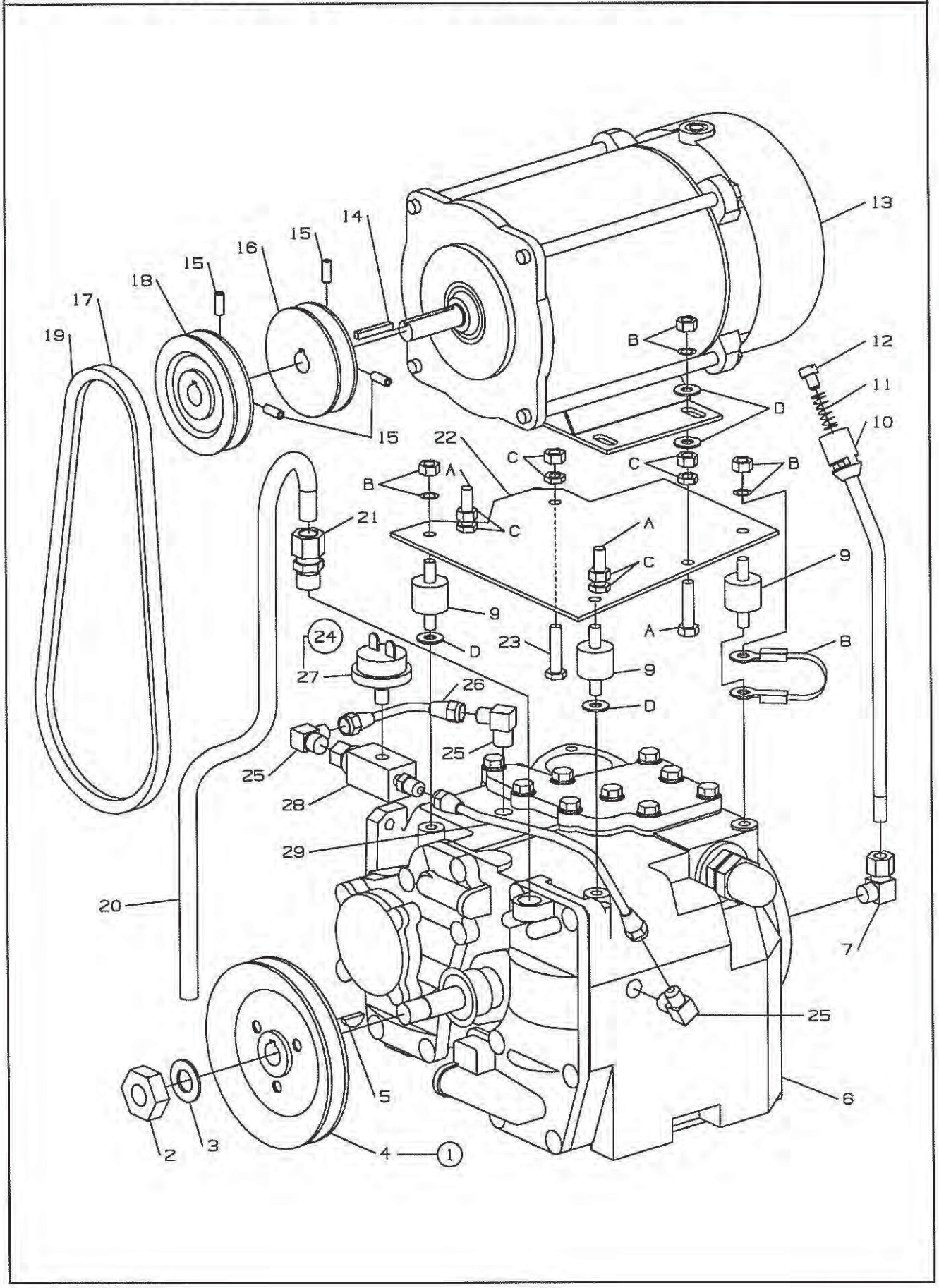

High power pump assembly & 750 Watt motor V1

Item	Part No	Description	Qty
1	822040	Pump pulley kit - Tatsuno [includes items 2 to 5]	1
2		Nut - 160	1
3		Washer plain WSHR/P-160	1
4		Pump pulley Q-703	1
5		Key - 5 mm wide Woodruff	1
6	820070	Pump unit Tatsuno PGS-0257-L **See page S-41**	1
7	823020	Elbow male 69 x 6 x 4	1
8	.87358	Motor bonding cable	1
9	829920	Mount anti-vibration R290-12	3
10	.87936	Test valve assembly	1
11	.83717	Test valve spring	1
12	.87938	Valve	1
13	821030	Crompark PA8364AKPN/V/NZ750W	1
14		Key (As supplied with item 15)	1
15	801020	Grubscrew ¼ UNC x ⅝ Knld cup (Before December 1st 1993)	2
	801000	Grubscrew 1/4 UNC x 5/16 Knld cup (After December 1st 1993)	2
16	.87723	Pulley motor - High speed DUO 82.5 mm (Duo)	1
17	823800	Vee belt A30	1
18	.85388	Pulley motor - High speed 90 mm dia (High speed single)	1
19	823800	Vee belt A30	1
20	.87943	Vent pipe - 8000 & 9000 series	1
21	823710	Connector male 68 x 8 x 6	1
22	.87835	Motor mounting plate	1
23	.87696	Setscrew machined head M8 x 35	1
24	.40121	Air sense venturi assembly [includes items 25 to 29]	1
		Optional for Air sense	
25	823180	Elbow male 49 x 4 x 4	3
26	.40124	Purge control tube assembly - Mk3	1
27	855270	Vacuum switch M-4080 x 17Hg	1
28	.40100	Air sense venturi sub assembly	1
29	.40123	Pressure chamber tube assembly - Mk3	1
A	800130	Setscrew engineers M8 x 35	
B	803240	Nut full steel M8	
	804030	Washer internal fan disc M8	
C	803620	Halfnut M8	
	803240	Nut full steel M8	
D	804090	Washer flat steel 5/16 ID x ¾ OD	

High power pump assembly & 750 Watt motor V1

Standard speed pump assembly & 450 Watt motor V2

Standard speed pump assembly & 450 Watt motor V2

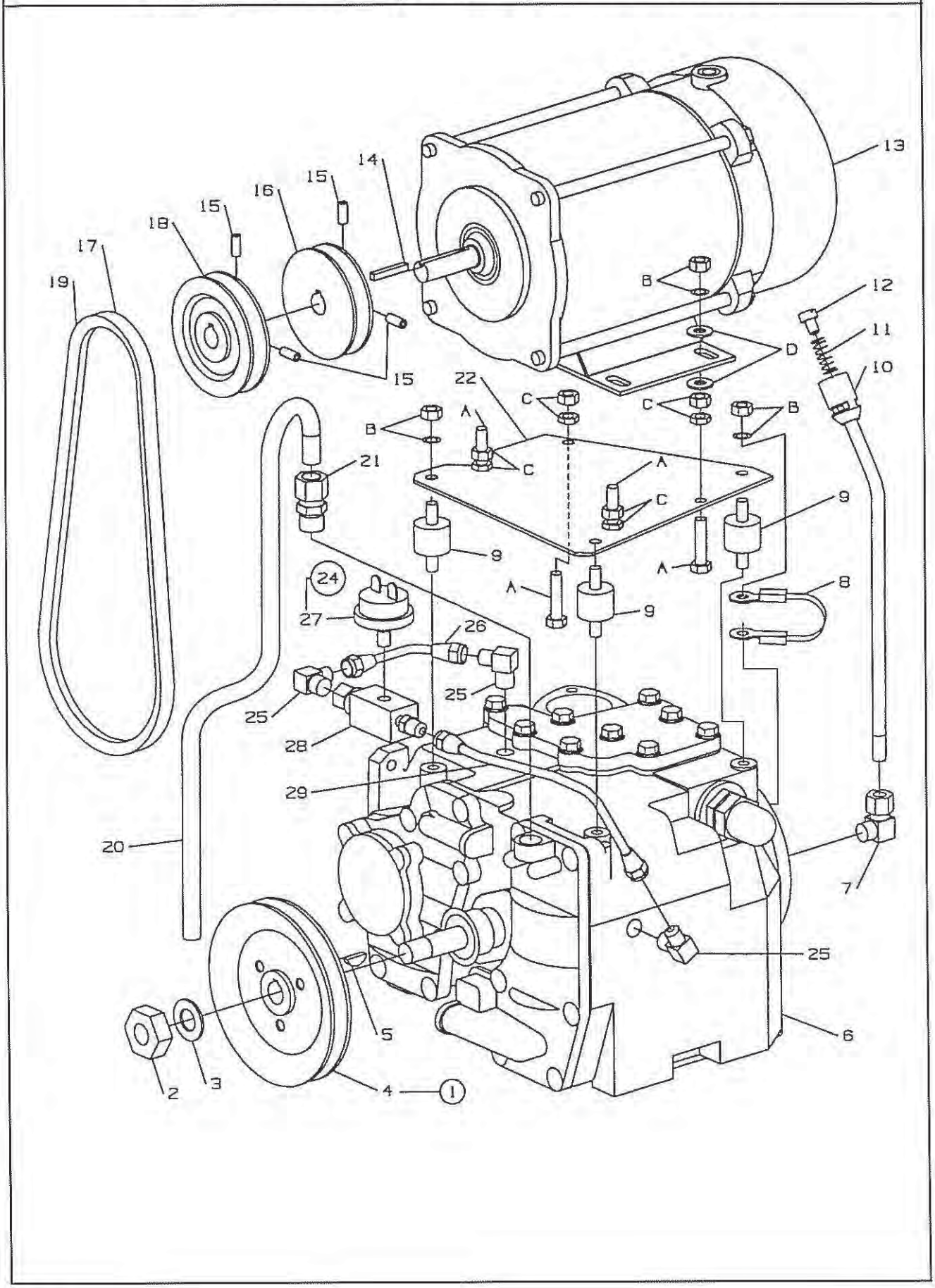

Standard speed pump assembly & 450 Watt motor V2

Item	Part No	Description	Qty
1	822040	Pump pulley kit - Tatsuno [includes items 2 to 5]	1
2		Nut - 160	1
3		Washer plain WSHR/P-160	1
4		Pump pulley Q-703	1
5		Key - 5 mm wide Woodruff	1
6	820060	Pump unit Tatsuno PGS-0257-K **See page S-41**	1
7	823020	Elbow male 69 x 6 x 4	1
8	.87358	Motor bonding cable	1
9	829920	Mount anti-vibration R290-12	3
10	.87936	Test valve assembly	1
11	.83717	Test valve spring	1
12	.87938	Valve	1
13	821040	Crompark PA7304X-T-PN/V/NZ450W	1
14		Key (As supplied with item 15)	1
15	801020	Grubscrew ¼ UNC x ⅝ Knld cup (Before December 1st 1993)	2
	801000	Grubscrew ¼ UNC x 5/16 Knld cup (After December 1st 1993)	2
16	.85127	Pulley motor - Standard speed 73 mm dia	1
17	823530	Vee belt A29	1
18	—		
19	—		
20	.87943	Vent pipe - 8000	1
21	823710	Connector male 68 X 8 X 6	1
22	.83634	Motor mounting plate	1
23	-		
24	.40121	Air sense venturi assembly [includes items 25 to 29]	1
		Optional for Air sense	
25	823180	Elbow male 49 x 4 x 4	3
26	.40124	Purge control tube assembly - Mk3	1
27	855270	Vacuum switch M -4080 x 17Hg	1
28	.40100	Air sense venturi sub assembly	1
29	.40123	Pressure chamber tube assembly - Mk3	1
A	800130	Setscrew engineers M8 x 35	
B	803240	Nut full steel M8	
	804030	Washer internal fan disc M8	
C	803620	Halfnut M8	
	803240	Nut full steel M8	
D	804090	Washer flat steel 5/16 ID x ¾ OD	

Standard speed pump assembly & 450 Watt motor V2

High power pump assembly & 750 Watt motor V2

High power pump assembly & 750 Watt motor V2

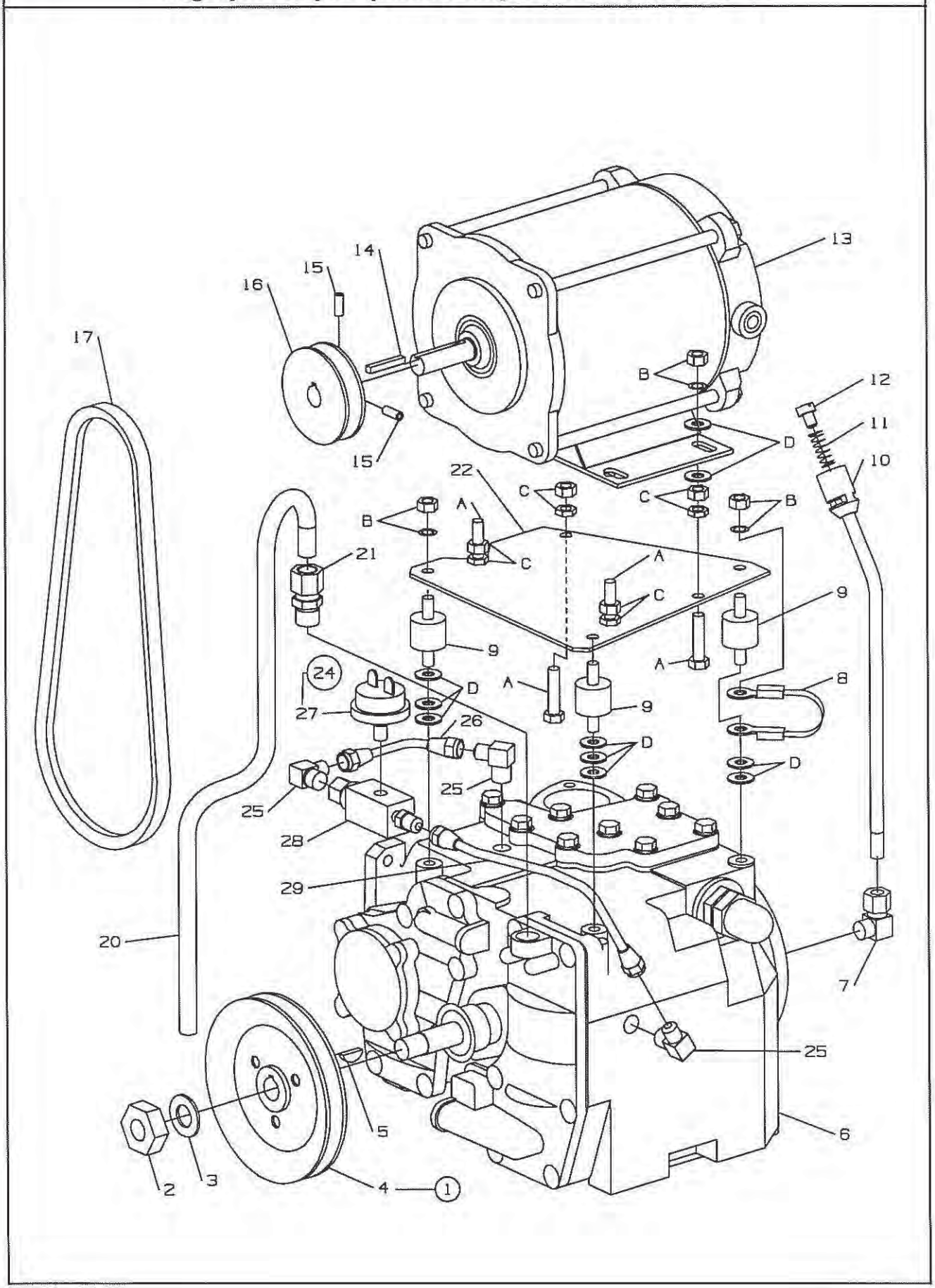

High power pump assembly & 750 Watt motor V2

Item	Part No	Description	Qty
1	822040	Pump pulley kit - Tatsuno [includes items 2 to 5]	1
2		Nut - 160	1
3		Washer plain WSHR/P-160	1
4		Pump pulley Q-703	1
5		Key - 5 mm wide Woodruff	1
6	820070	Pump unit Tatsuno PGS-0257-L **See page S-41**	1
7	823020	Elbow male 69 x 6 x 4	1
8	.87358	Motor bonding cable	1
9	829920	Mount anti-vibration R290-12	3
10	.87936	Test valve assembly	1
11	.83717	Test valve spring	1
12	.87938	Valve	1
13	821030	Crompark PA8364AKPN/V/NZ750W	1
14		Key (As supplied with item 15)	1
15	801020	Grubscrew ¼ UNC x ⅝ Knld cup (Before December 1st 1993)	2
	801000	Grubscrew ¼ UNC x ⅝ Knld cup (After December 1st 1993)	2
16	.87723	Pulley motor - High speed DUO 82.5 mm (Duo)	1
17	823800	Vee belt A30	1
18	.85388	Pulley motor - High speed 90 mm dia (High speed single)	1
19	823800	Vee belt A30	1
20	.87943	Vent pipe - 8000 & 9000 series	1
21	823710	Connector male 68 x 8 x 6	1
22	.87835	Motor mounting plate	1
23	.87696	Setscrew machined head M8 x 35	1
24	.40121	Air sense venturi assembly [includes items 25 to 29]	1
		Optional for Air sense	
25	823180	Elbow male 49 x 4 x 4	3
26	.40124	Purge control tube assembly - Mk3	1
27	855270	Vacuum switch M-4080 x 17Hg	1
28	.40100	Air sense venturi sub assembly	1
29	.40123	Pressure chamber tube assembly - Mk3	1
A	800130	Setscrew engineers M8 x 35	
B	803240	Nut full steel M8	
	804030	Washer internal fan disc M8	
C	803620	Halfnut M8	
	803240	Nut full steel M8	
D	804090	Washer flat steel 5/16 ID x ¾ OD	

High power pump assembly & 750 Watt motor V2

Dispenser module
- Single

Dispenser module - Single

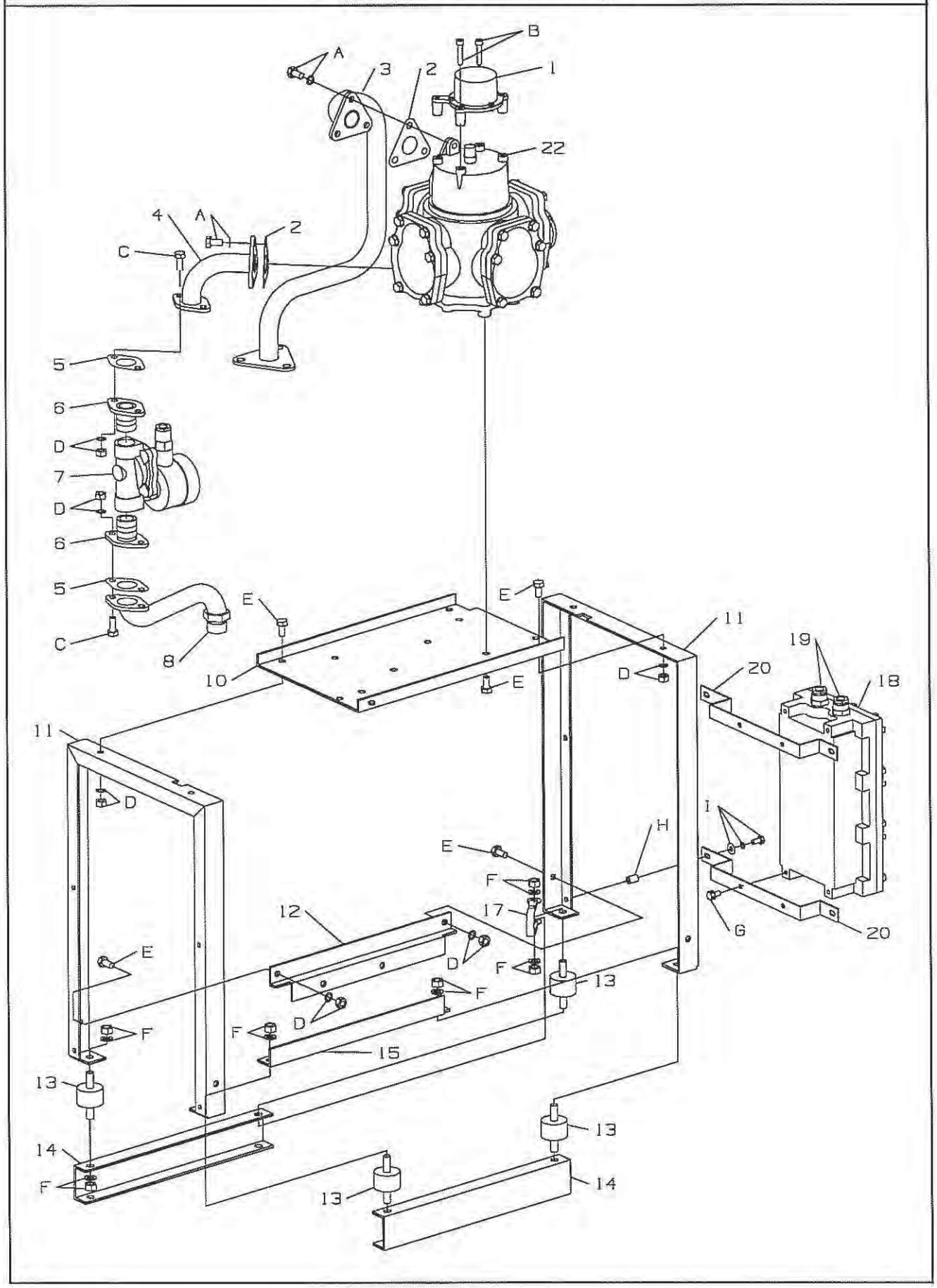

Dispenser module - Single

Item	Part No	Description	Qty
	.87511	Dispenser module assembly - Single	
1	.87804	Encoder assembly **See page M-37**	1
2	.85424	Flange gasket (T) meter 1"	2
3	.87940	Riser pipe assembly - MPD single	1
4	.87905	Delivery pipe assembly - 8000 series MPD & MPP	1
5	..PP269	Discharge gasket 2 clamp holes	2
6	.09011	Delivery pipe extension assembly - preset	2
7	852530	Solenoid valve - ASCO ¾" **See page S-5**	1
8	.87935	Solenoid valve delivery pipe assembly	1
9	—	--	--
10	.87833	Meter mounting plate	1
11	.87830	Module upright	2
12	.87831	Module "Z" bracket	1
13	829900	Mount anti-vibration R224	4
14	.87834	Module rail	2
15	.87832	Module "L" bracket	1
16	—	--	--
17	.87356	Module bonding cable	1
18	.87790	AC control box assembly - MPD	1
	.87133	AC control PCB assembly - MPD **See page P-25**	1
	.87802	Junction box assembly - no internals	1
	.87800	Junction box - MPD	1
	.87801	Junction box lid - MPD	1
19		Flameproof SAA Certified Gland [tolerance to match cable]	3
20	.87809	AC control box mounting bracket	2
21	—	--	--
22	820030	Flow meter Tatsuno MP-02515-G **See page S-1**	1
A	800090	Setscrew engineers M8 x 16	
	804030	Washer internal fan disc M8	
B	800050	Capscrew skt hd M6 x 30	
C	800100	Setscrew engineers M8 x 20	
D	803240	Nut full steel M8	
	804030	Washer internal fan disc M8	
E	800090	Setscrew engineers M8 x 16	
F		Nut [as supplied with item 13]	
	804220	Washer spring M10	
G	802180	Screw T23 HWF ¼-20 x 20	
H	803590	Nutsert M6 9658-0619	
I	800960	Setscrew engineers M6 x 16	
	804200	Washer spring M6	
	804460	Washer flat steel M6 x 16 mm	

Dispenser module - Single

Dispenser module
- Duo

Dispenser module - Duo

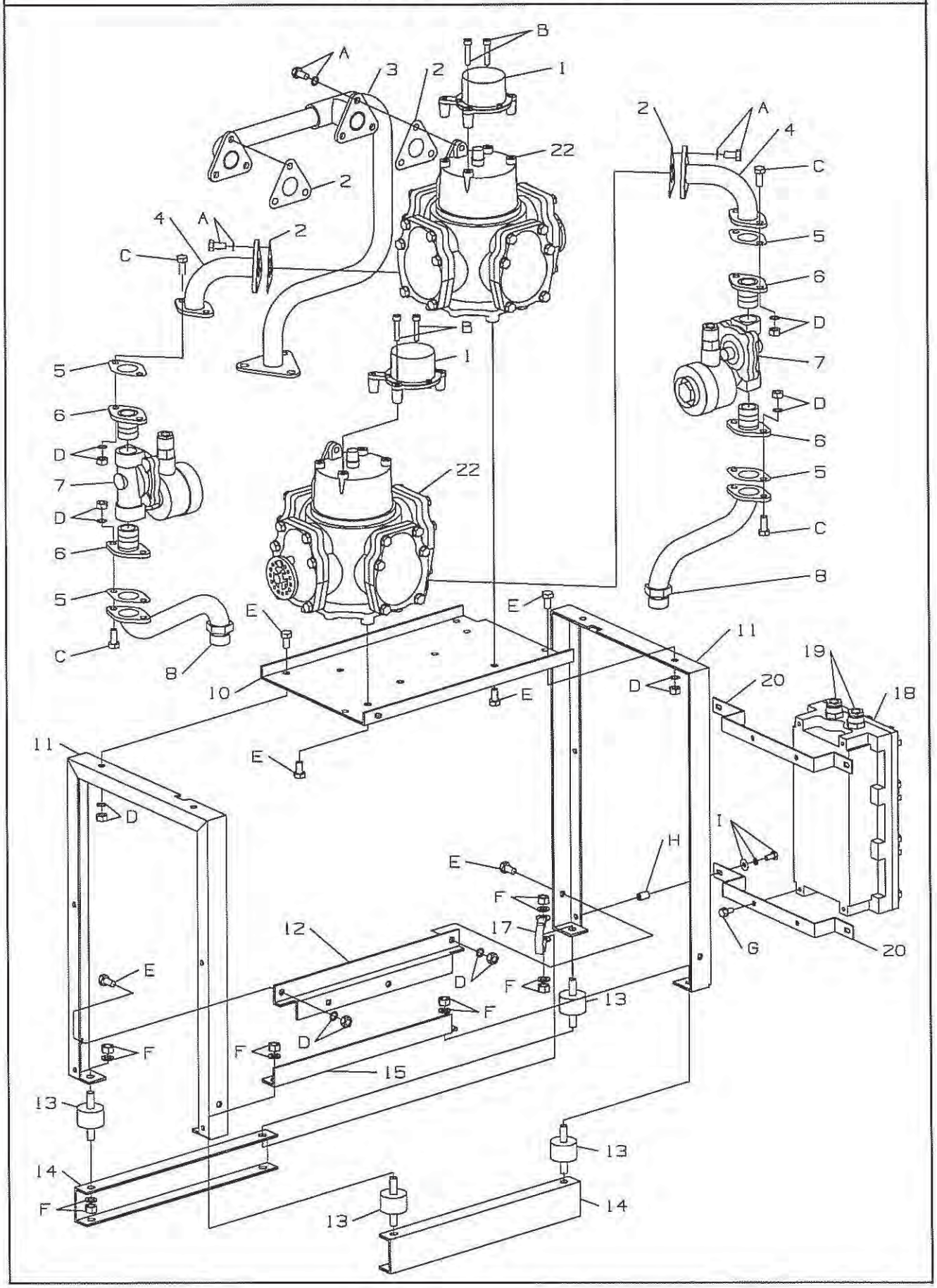

Dispenser module - Duo

Item	Part No	Description	Qty
	.87510	Dispenser module assembly - Duo	
1	.87804	Encoder assembly **See page M-37**	2
2	.85424	Flange gasket (T) meter 1"	4
3	.87997	Manifold pipe assembly - MPD Duo	1
4	.87905	Delivery pipe assembly - 8000 series MPD & MPP	2
5	..PP269	Discharge gasket 2 clamp holes	4
6	.09011	Delivery pipe extension assembly - preset	4
7	852530	Solenoid valve - ASCO ¾" **See page S-5**	2
8	.87935	Solenoid valve deliver pipe assembly	2
9	—	—	—
10	.87833	Meter mounting plate	1
11	.87830	Module upright	2
12	.87831	Module "Z" bracket	1
13	829900	Mount anti-vibration R224	4
14	.87834	Module rail	2
15	.87832	Module "L" bracket	1
16	—	--	--
17	.87356	Module bonding cable	1
18	.87790	AC control box assembly - MPD	1
	.87133	AC control PCB assembly - MPD **See page P-25**	1
	.87802	Junction box assembly - no internals	1
	.87800	Junction box - MPD	1
	.87801	Junction box lid - MPD	1
19		Flameproof SAA Certified Gland [tolerance to match cable]	4
20	.87809	AC control box mounting bracket	2
21	—	--	--
22	820030	Flow meter Tatsuno MP-02515-G **See page S-1**	2
A	800090	Setscrew engineers M8 x 16	
	804030	Washer internal fan disc M8	
B	800050	Capscrew skt hd M6 x 30	
C	800100	Setscrew engineers M8 x 20	
D	803240	Nut full steel M8	
	804030	Washer internal fan disc M8	
E	800090	Setscrew engineers M8 x 16	
F		Nut [as supplied with item 13]	
	804220	Washer spring M10	
G	802180	Screw T23 HWF ¼-20 x 20	
H	803590	Nutsert M6 9658-0619	
I	800960	Setscrew engineers M6 x 16	
	804200	Washer spring M6	
	804460	Washer flat steel M6 x 16 mm	

Dispenser module - Duo

LPG module

LPG module

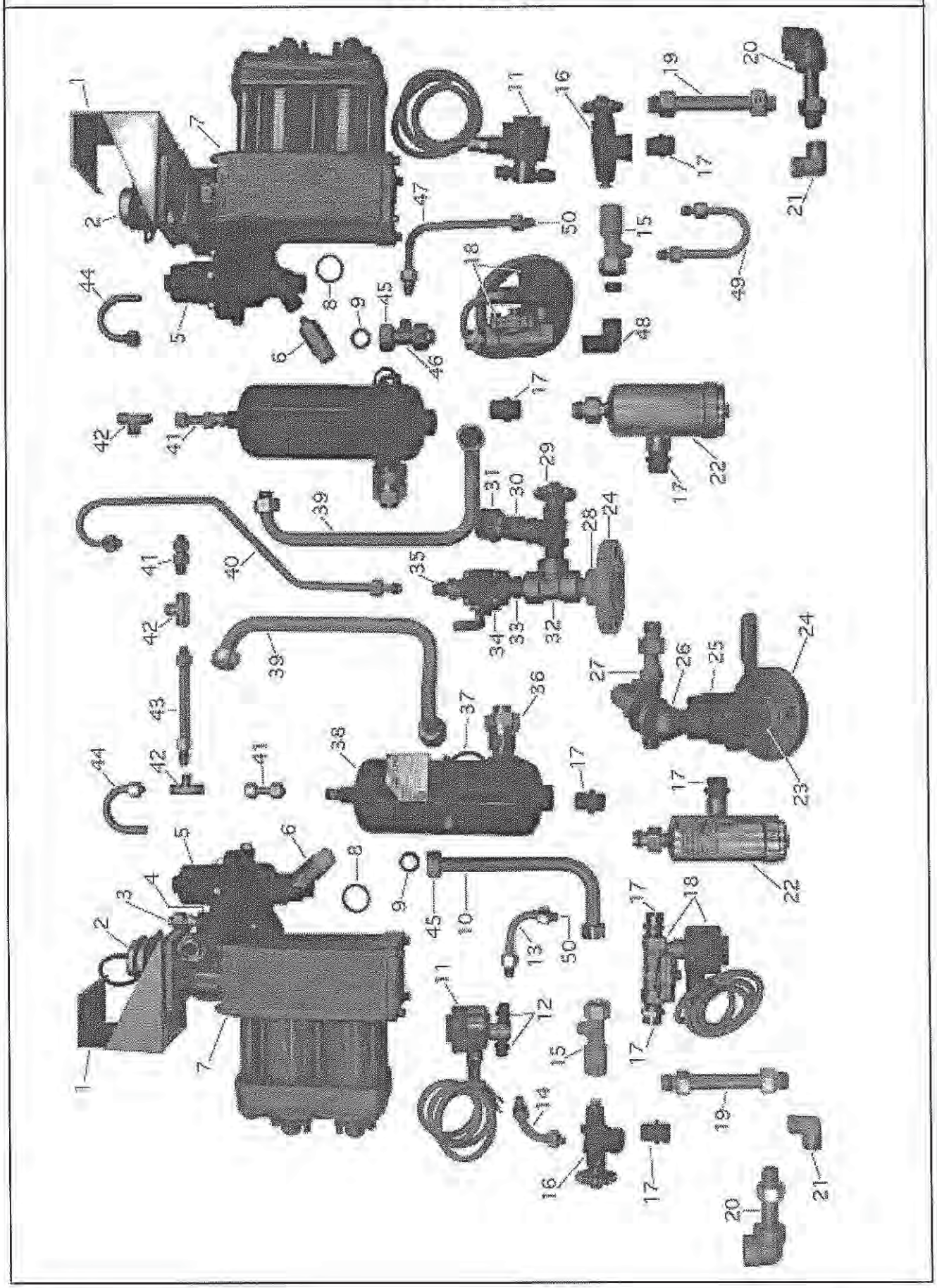

LPG module

Item	Part No	Description	Qty
1	.07644	Module mounting bracket	2
2	.07434	Encoder assembly - LPG (Series II)	2
3	820087	Threaded spout	2
4	824960	Elbow m & f ¼" - ¼" NPT	4
5	820083	Schwelm kitset part - Differential valve	2
6	820085	Schwelm kitset part - Hydrastatic valve	2
7	820081	Schwelm kitset part - Meter	2
8	820088	O-ring	2
9	820089	Flat seal	2
10	.07694	LPG outlet delivery pipe assembly	1
11	852760	Solenoid valve ⅛" LPG	2
12	824870	Connector male ¼ NPT - 12	5
13	.07684	LPG final inlet pipe - rear V2	1
14	.07685	LPG final outlet pipe - rear V2	1
15	.07690	LPG delivery connector pipe assembly	2
16	822290	Stop valve - rego A7550PX	2
17	824840	Connector male ¾ NPT - 22	9
18	852750	Solenoid valve ¾" LPG	2
19	.07687	LPG connector pipe - long V2	2
20	.07600	LPG exit pipe assembly #1	2
20a	.88048	LPG exit pipe assembly - Shell	2
21	824900	Elbow union 22-22	2
22	820082	Schwelm kitset part - Filter	2
23	824950	Nipple reducing 1 ¼" - 1" NPT	1
24	824940	Flange ASA-300 1 ¼" threaded	2
25	822210	Ball valve 1" NPT AF44	1
26	824910	Elbow m&f 1" - 1" NPT	1
27	.07608	LPG manifold pipe assembly #15	1
28	824990	Nipple reducing 1 ¼" - ¾" npt	1
29	822240	Stop valve - rego A7550P	1
30	822260	Check valve - rego 3146	1
31	822230	Adaptor ACME 1 ¾" - rego	1
32	824980	Tee threaded ¾" NPT	1
33	824970	Nipple ¾" NPT	1
34	822220	Ball valve ¾" NPT AF44	1
35	824850	Connector male ¾- 12 larga	1
36	820086	Schwelm kitset part - Check valve	2
37	.07660	Temperature probe assembly	2
37a	.07436	Adaptor-LPG temp probe (not shown) [replaces blank nut in meter]	2
38	820084	Schwelm kitset part - Vapour eliminator	2
39	.07628	LPG inlet delivery pipe #8	2
40	.07624	LPG vapour return line #10	1
41	.07625	LPG connector pipe - short #11	3
42	824880	Tee union TL-12	3
43	.07626	LPG connector pipe - long #12	1
44	.07627	LPG vapour elim "U" pipe #13	2
45	824790	Nut (Ex Schwelm LPG kitset)	2
46	.07631	LPG connector pipe assembly - front	1
47	.07620	LPG final inlet pipe - front #7	1
48	824770	Elbow male ¾" NPT (WE22-PL)	1
49	.07686	LPG final outlet pipe - front V2	1
50	.07699	Restrictor plug [not shown]	2

LPG module

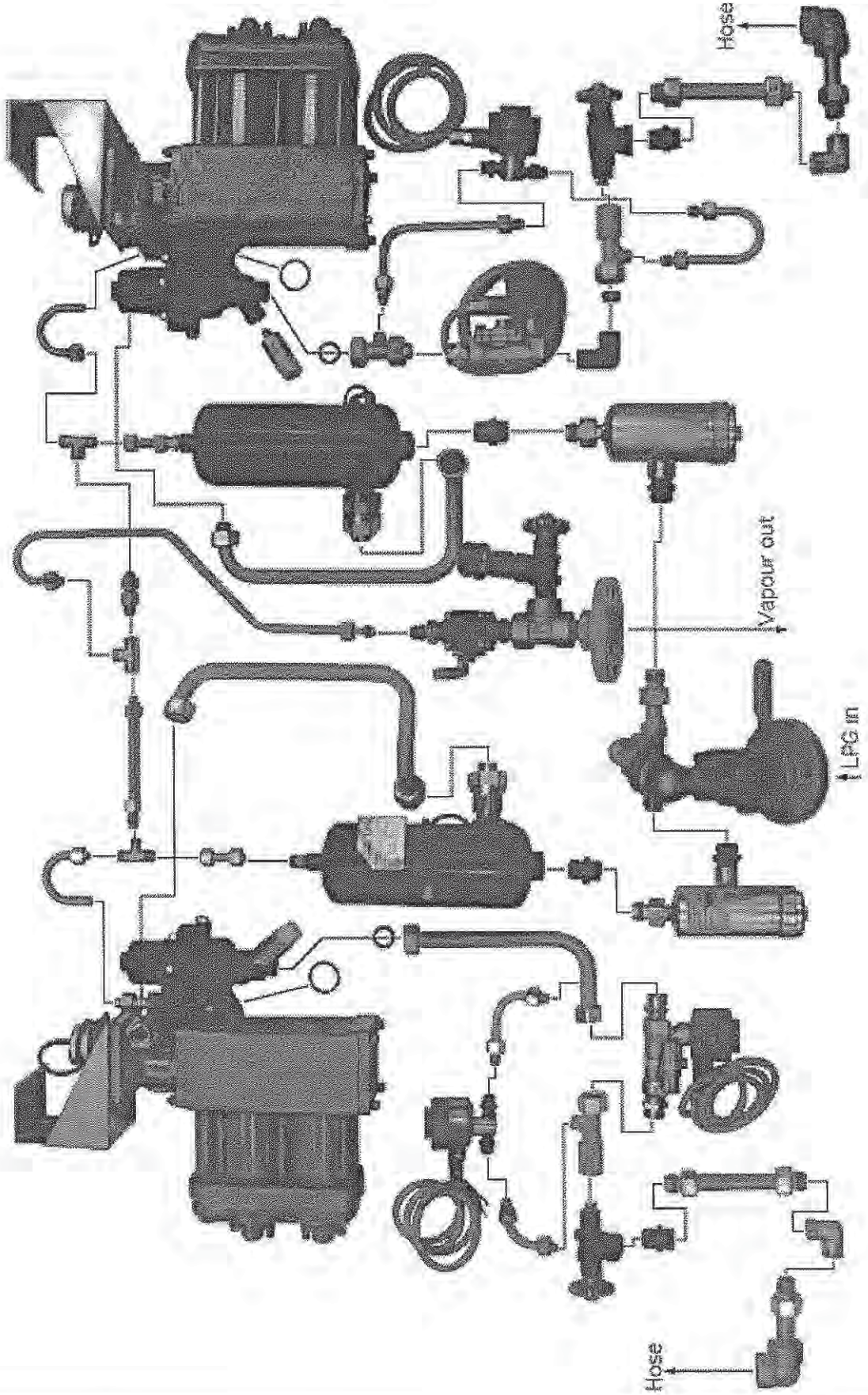

Encoder

Encoder

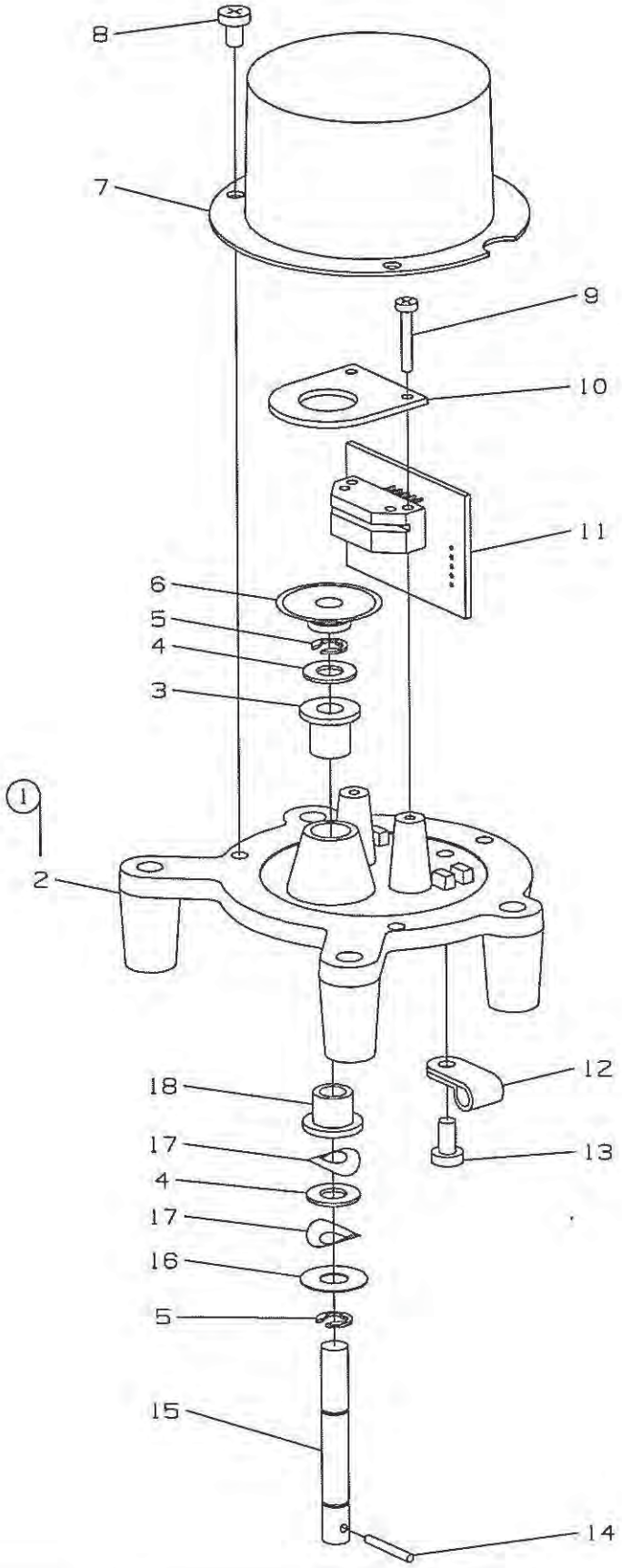

Encoder

Item	Part No	Description	Qty
1	.87804	Encoder assembly [includes items 2 to 18] **Obsolete**	1
1a	.07434	Encoder assembly - Series II	1
2	.87820	Encoder body	1
		Washer flat steel ¼" ID x 12 OD, [added if the body is Sand casted]	
3	825310	Bearing - flanged F0812-2	1
4	804070	Washer red fibre ¼" ID	2
5	806540	Clip E 5133/25 ¼"	
6	850010	Code wheel heds 5100-c06	1
7	.87821	Encoder cover	1
8	800600	Screw steel M4 x 6 pan hd	
9	800115	Screw steel M2.5 x 16 pan hd	2
10	.87824	Protective plate - encoder	1
11	.87141	Encoder PCB assembly **See page P-33 Obsolete**	1
11a	.87146	Encoder PCB assembly - Series II **See page P-37**	1
12	824060	Clip cable - PUC4 3/16"	1
13	800380	Screw brass M4 x 8 pan hd	1
14	806650	Pin tension 2 mm x 16 mm	1
15	.87822	Encoder spindle	1
16	804160	Washer flat steel ¼" ID - 26SW	1
17	.87823	Encoder washer - wavey	2
18	825250	Bearing - flanged F0812-0.354"	1
	.87307	Encoder cable assembly	1
19	.07640	Drive for LPG option	2
20	806650	Pin for LPG option	2

Encoder

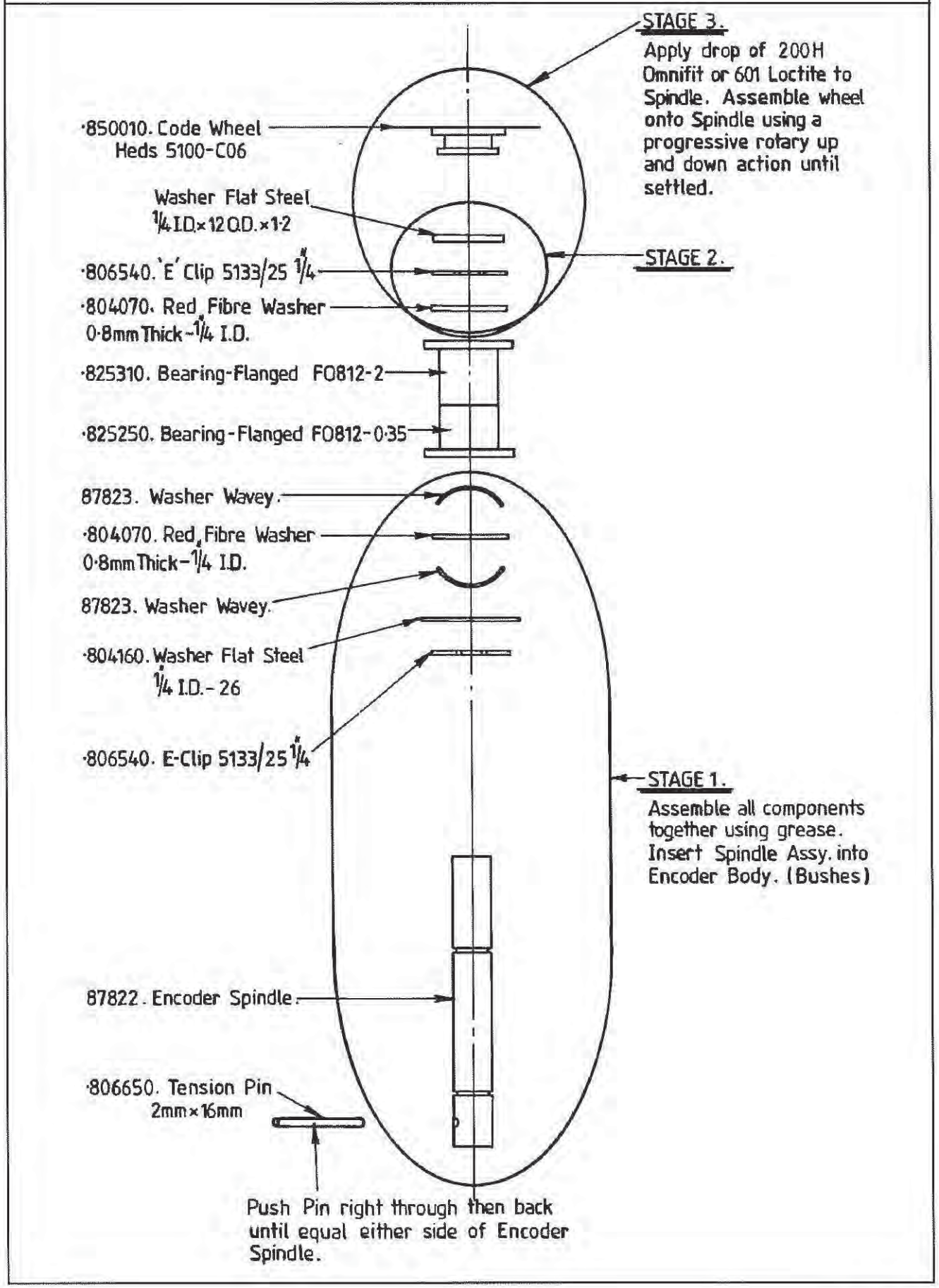
STAGE 3.
Apply drop of 200H Omnifit or 601 Loctite to Spindle. Assemble wheel onto Spindle using a progressive rotary up and down action until settled.
·850010. Code Wheel Heds 5100-C06
Washer Flat Steel ¼ I.D.×12 O.D.×1·2
STAGE 2.
·806540. 'E' Clip 5133/25 ¼
·804070. Red Fibre Washer 0·8mm Thick-¼ I.D.
·825310. Bearing-Flanged F0812-2
·825250. Bearing-Flanged F0812-0·35
87823. Washer Wavey.
·804070. Red Fibre Washer 0·8mm Thick-¼ I.D.
87823. Washer Wavey.
·804160. Washer Flat Steel ¼ I.D.-26
·806540. E-Clip 5133/25 ¼
STAGE 1.
Assemble all components together using grease. Insert Spindle Assy. into Encoder Body. (Bushes)
87822. Encoder Spindle.
·806650. Tension Pin 2mm×16mm
Push Pin right through then back until equal either side of Encoder Spindle.

PCB's

Contents

Gilbarco interface PCB - 83826 ..... P-1
Input processor PCB - 83841 ..... P-5
Main Processor PCB - 87101 ..... P-9
Control Logic Distribution PCB - 87111 ..... P-13
MPD Display PCB - 87121 ..... P-17
Hex pump display PCB - 87126 ..... P-21
AC Control PCB - Dispenser - 87133 ..... P-25
AC Control PCB - Pump - 87132 ..... P-29
Encoder Module PCB - 87141 ..... P-33
Encoder series II PCB - 87146 ..... P-37
Power Supply PCB - 87151 ..... P-41
3 Product, Dollars per Litre Display PCB - 87201 ..... P-45
Zener barrier PCB - 87236 ..... P-49
2 Product, Dollars per Litre Display PCB - 87241 ..... P-53
Single Price Display PCB - 87271 ..... P-57
Dollars & Litres Display PCB - 87276 ..... P-61
Preset Display PCB - 87281 ..... P-65
Totes PCB V2 - 87286 ..... P-69

June 1994

Gilbarco interface PCB - 83826

Gilbarco interface PCB - 83826

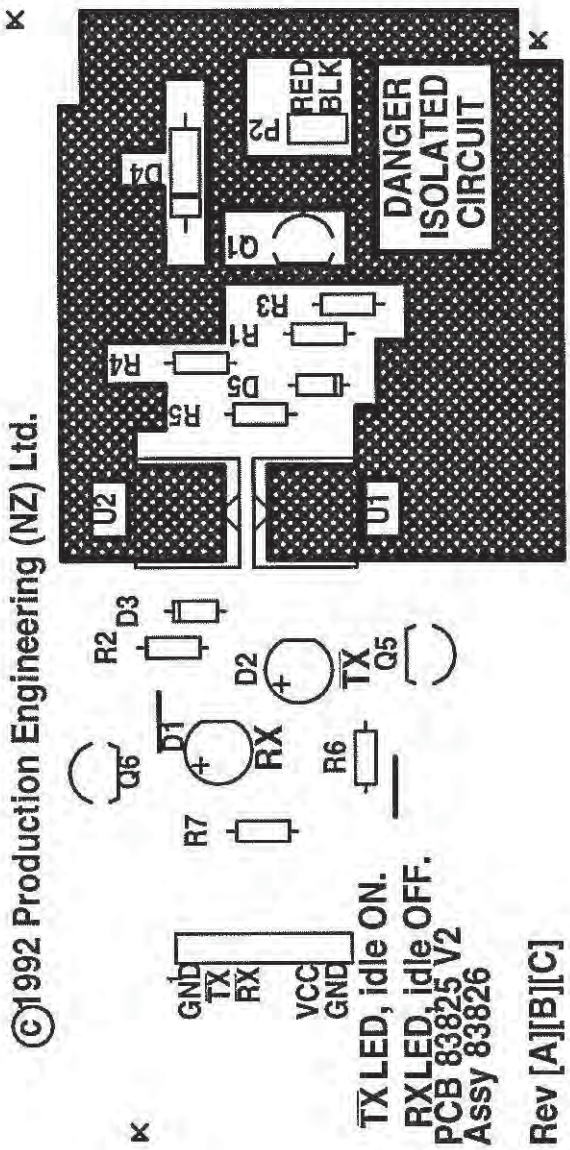

Gilbarco interface PCB - 83826

Part	Description
..160E	Resistor 160E 0.6W 1% mtl flm
..1K0	Resistor 1k0 0.5W 5% V-16T
..1K2	Resistor 1k2 0.5W 5% SFR-16T
..1N4002	Diode 1N4002 1a 100v silicon
..1N4148	Diode 1N4148 silicon signal
..470E	Resistor 470e 0.5W 5% SFR-16t
..470K	Resistor 470k 0.5W 5% SFR-16t
..68E	Resistor 68e 0.5W 5% SFR-16t
..BC337	Transistor BC337 npn lo pwr
..BC548B	Transistor BC548B npn
..BST76A	Transistor n channel mosfet
..CNW85	CNW85 opto coupler-heavy duty
.83825	83825 V2 gilbarco interface PCB
835020	Bag static shield 102 mm x 152 mm
847040	LED red diff hi-eff 5 mm
861960	Methode 1100-8-106-01 6W HDR
863320	Berg 68001-502 2W-S-STIK-G-ST

Individual parts are no longer available for replacement on site.
Replace PCB by ordering part No.83826.

Gilbarco interface PCB - 83826

Input processor PCB - 83841

Input processor PCB - 83841

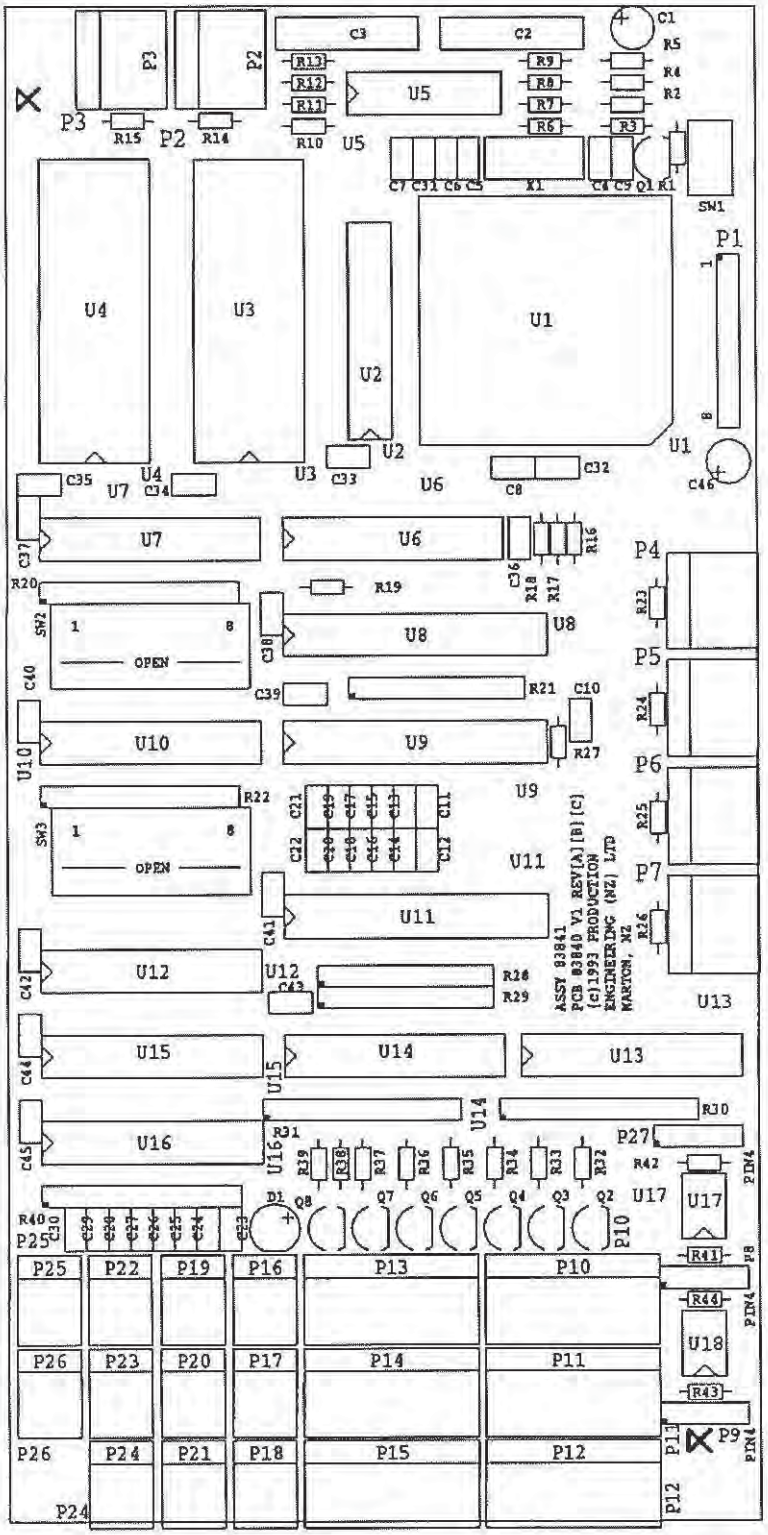

Input processor PCB - 83841

Part	Description
..1K5	Resistor 1K5 0.5W 5% SFR-16T
..200E	Resistor 200E 0.6W 1% MTL FLM
..22K	Resistor 22K 0.5W 5% SFR-16T
..2K0	Resistor 2K0 0.6W 1% MTL FLM
..4K7	Resistor 4K7 0.5W 5% SFR-16T
..4N35	GE4N35 opto isolator
..560K	Resistor 560K 0.5W 5% SFR-16T
..62256	HM62256lP-12 32K x 8 CMOS RAM
..74HCT245	74HCT245N octal transceiver
..74HCT573	74HCT573N octal latch
..74HCT9014	74HCT9014 9 x schmitt inv/driver
..80C552	PCB80C552 8 bit microcontroller
..BC558B	Transistor BC558B PNP
..TL431	Voltage reference TL431 2V495
..TLC1079	TLC1079 precision quad op amp
.83500	Ceepec-input processor eprom
.83507	Ceepec-input processor pld#1
.83508	Ceepec-input processor pld#2
.83509	Ceepec-input processor pld#3
.83840	83840 V0 input processor PCB
835010	Bag static shield 152 mm x 254 mm
840305	Resistor 10K 0.6W 1% MTL FLM
840650	Resistor array 10K x 8 9 pin
840810	Resistor array 22K x 4 8 pin
841230	Cap 220nF 50V monocap z5u
841480	Cap 470nF 100V polyester ero
841590	Cap 22pF 100V npo ceramic
841830	Cap 2.2nF 100V disc ceramic
843680	Cap 2.2µF 50V electro radial
847200	Led red diffused 3 mm
852460	Crystal 11.0592 mHz DC18u - DMF30
855310	Switch-multi DSS7O8 dil 8 way
856250	Switch toggle spdt - C & K T101
862270	Molex 41761 5W st header-gold
862460	Amp 821574-1 68 way plcc skt
863340	Berg 68001-504 4W-S-STIK-G-ST
863360	Berg 68001-508 8W-S-STIK-G-ST
864140	Preci-dip 28 way dil socket
864280	Molex 41761 2W st header-gold
864290	Molex 41761 3W st header-gold

Individual parts no longer available for replacement on site.
Replace PCB by ordering part No .83841.

Input processor PCB - 83841

Main Processor PCB
- 87101

Main processor PCB - 87101

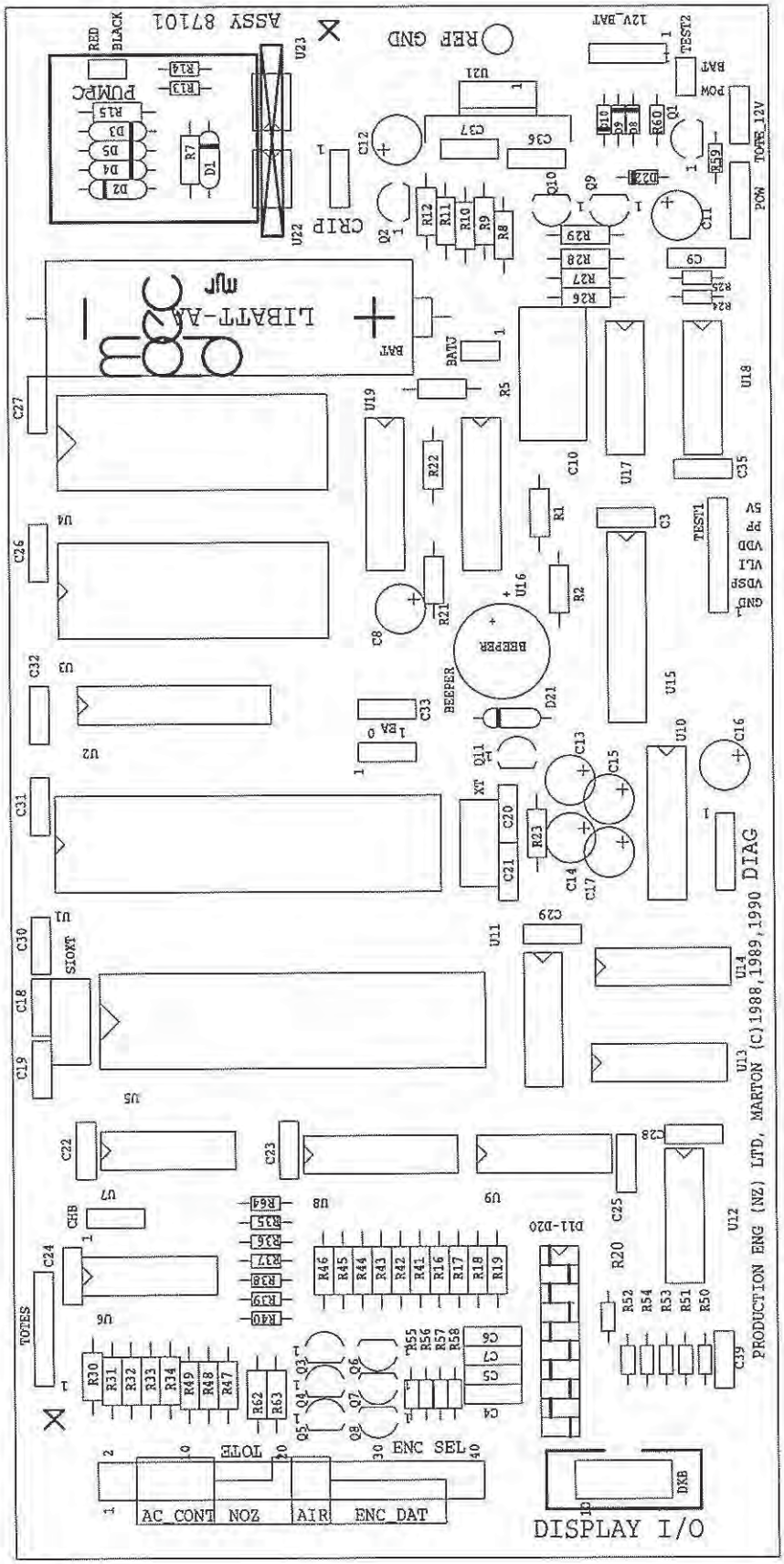

Main Processor PCB - 87101

Part	Description
..100E	Resistor 100E 0.5 W 5% SFR-16T
..100K	Resistor 100k 0.5 W 5% SFR-16T
..10E	Resistor 10E 0.5 W 5% SFR-16T
..10K	Resistor 10K 0.5 W 5% SFR-16T
..150K	Resistor 150K 0.5 W 5% SFR-16T
..180E	Resistor 180E 0.5 W 5% SFR-16T
..1K5	Resistor 1K5 0.5 W 5% SFR-16T
..1K8	Resistor 1K8 0.5 W 5% SFR-16T
..1N4148	Diode 1N4148 silicon signal
..20K	Resistor 20K 0.6 W 1% MTL FLM
..22E	Resistor 22E 0.5 W 5% sFR-16T
..2692	SCC2692AC1N40 cmos duart-dil
..39K	Resistor 39K 0.5 W 5% SFR-16T
..4098	4098 dual monostabl mulvibtr
..4541	CD4541BCN cmos osc divider
..470E	Resistor 470E 0.5 W 5% SFR-16T
..470K	Resistor 470K 0.5 W 5% SFR-16T
..4K7	Resistor 4K7 0.5 W 5% SFR-16T
..4N33	GE4N33 opto isolator
..4N35	GE4N35 opto isolator
..62256	HM62256LP-12 32 K x 8 cmos ram
..680E	Resistor 680E 0.5W 5% SFR-16T
..691	MAX691CPE micro supervisory IC
..74HCT08	74HCT08N quad 2 i/p and gate
..74HCT139	74HCT139N dual line decoder
..74HCT14	74HCT14 hex schmit trig invert
..74HCT240	74HCT240N octal 3 state buff
..74HCT573	74HCT573N octal latch
..74HCT86	74HCT86 quad exclusive or gate
..80C32	P80C32 8-bit microcomputer
..82E	Resistor 82E 0.5 W 5% SFR-16T
..82K	Resistor 82K 0.5 W 5% SFR-16T
..BC548B	Transistor BC548B npn
..BC558B	Transistor BC558B pnp
..BZX79C13V	Diode zener BZX79C13 V 400 MW
..LM340T5	Voltage reg lM340T-5 POS
..MPSA14	Transistor MPSA14 npn pwr
.87100	87100 V5 MPD processor PCB
.87380	Multipec processor eprom
800530	Screw posidrive pan hd M3 x 6
803140	Nut full steel M3 (ajax)
804490	Washer internal fan disc M3
835010	Bag static shield 152 mm x 254 mm
840235	Cap 10 µF 35 V tant dip bead
841010	Cap 10 nF 63 V polyester ero
841070	Cap 1 µF 35 V tant dip bead
841080	Cap 1 µF 63 V polyester ero
841260	Cap 10 pF 100 V npo ceramic
841290	Cap 33 pF 100 V npo ceramic
841430	Cap 1 nF 160 V polyester ero
841540	Cap 220 nF 50 V monocap z5u
852320	Crystal 3.6864MHz HC18U-DMF30
852460	Crystal 11.0592MHz DC18U-DMF30

Main processor PCB - 87101

Part	Description
854110	Batt lithium AA-GO6/56 3V
860820	R&N IDH-10-LP-S3-TG ST LOW HDR
861640	Methode 1100-8-103-01 3W HDR
861960	Methode 1100-8-106-01 6W HDR
863290	Berg 66464-102 2W S/R M/jumper
863320	Berg 68001-502 2W-S-STIK-G-ST
863330	Berg 68001-503 3W-S-STIK-G-ST
863340	Berg 68001-504 4W-S-STIK-G-ST
863350	Berg 68001-506 6W-S-STIK-G-ST
863420	Berg 67997-540 40W-D-STIK-G-ST
864120	Preci-dip 16way dil socket
864140	Preci-dip 28way dil socket
864150	Preci-dip 40way dil socket
866360	Heatsink PSB2-1CB black to-220
866620	Crystal insulator for HC18U
866670	Vero terminal 20-2137D

Main Processor Versions 3 & 4 will be released at a later date.

Individual parts no longer available for replacement on site.
Replace PCB by ordering oart No.87101.

Control Logic Distribution PCB - 87111

Control Logic Distribution PCB - 87111

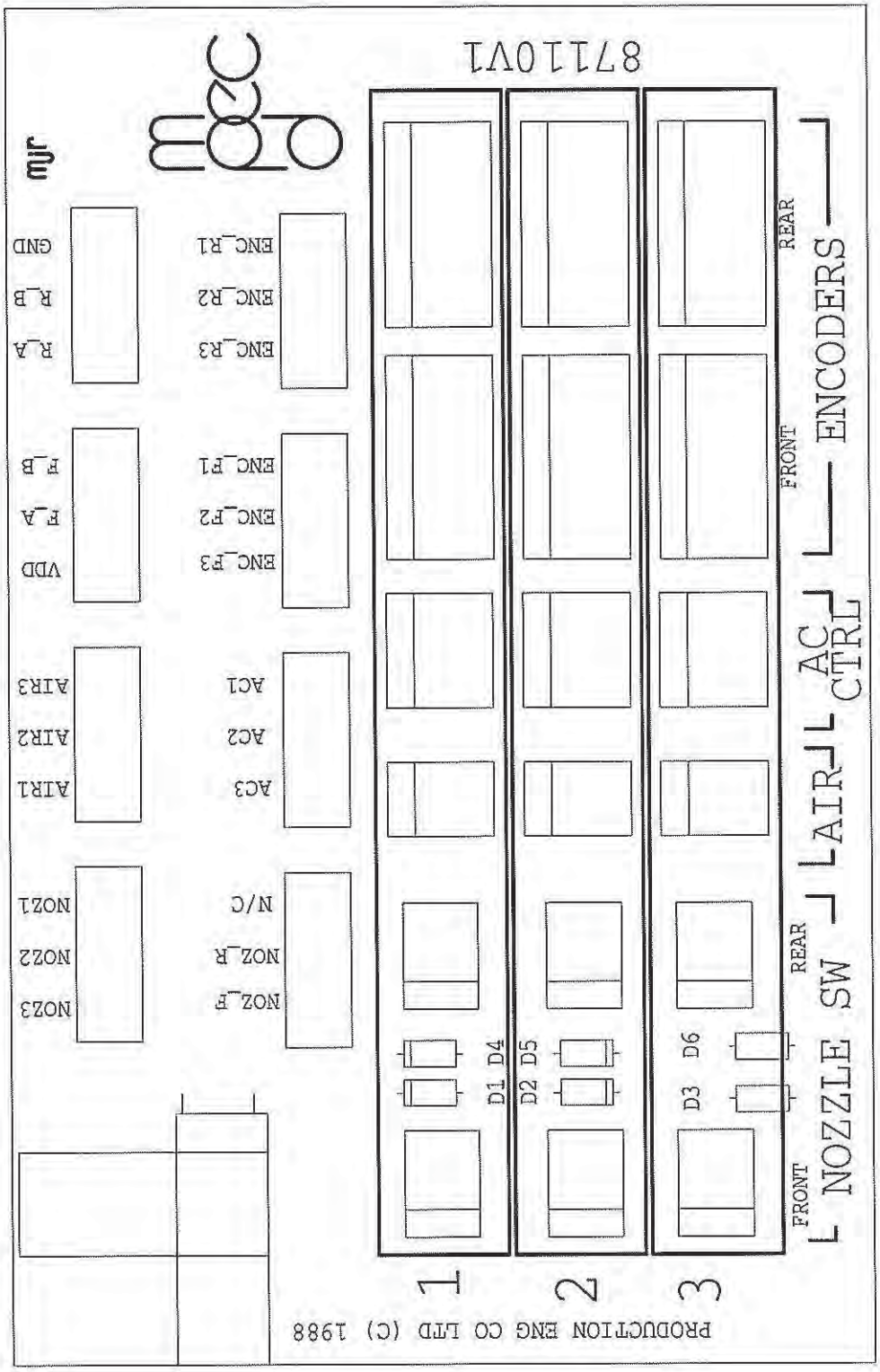

Control Logic Distribution PCB - 87111

Part	Description
..1N4148	Diode 1N4148 silicon signal
.87110	87110 V1 control logic pcb
862270	Molex 26-61-1050 5 W WFR-G-STFL
864280	Molex 26-61-1020 2 W WFR-G-STFL
864290	Molex 26-61-1030 3 W WFR-G-STFL
866580	Krone 6048-1-001-03 3 W cnntr

Control Distribution PCB Version 0 will be released at a later date.

Individual parts no longer available for replacement on site.
Replace PCB by ordering part No 87111.

Control Logic Distribution PCB - 87111

MPD Display PCB
- 87121

MPD Display PCB - 87121

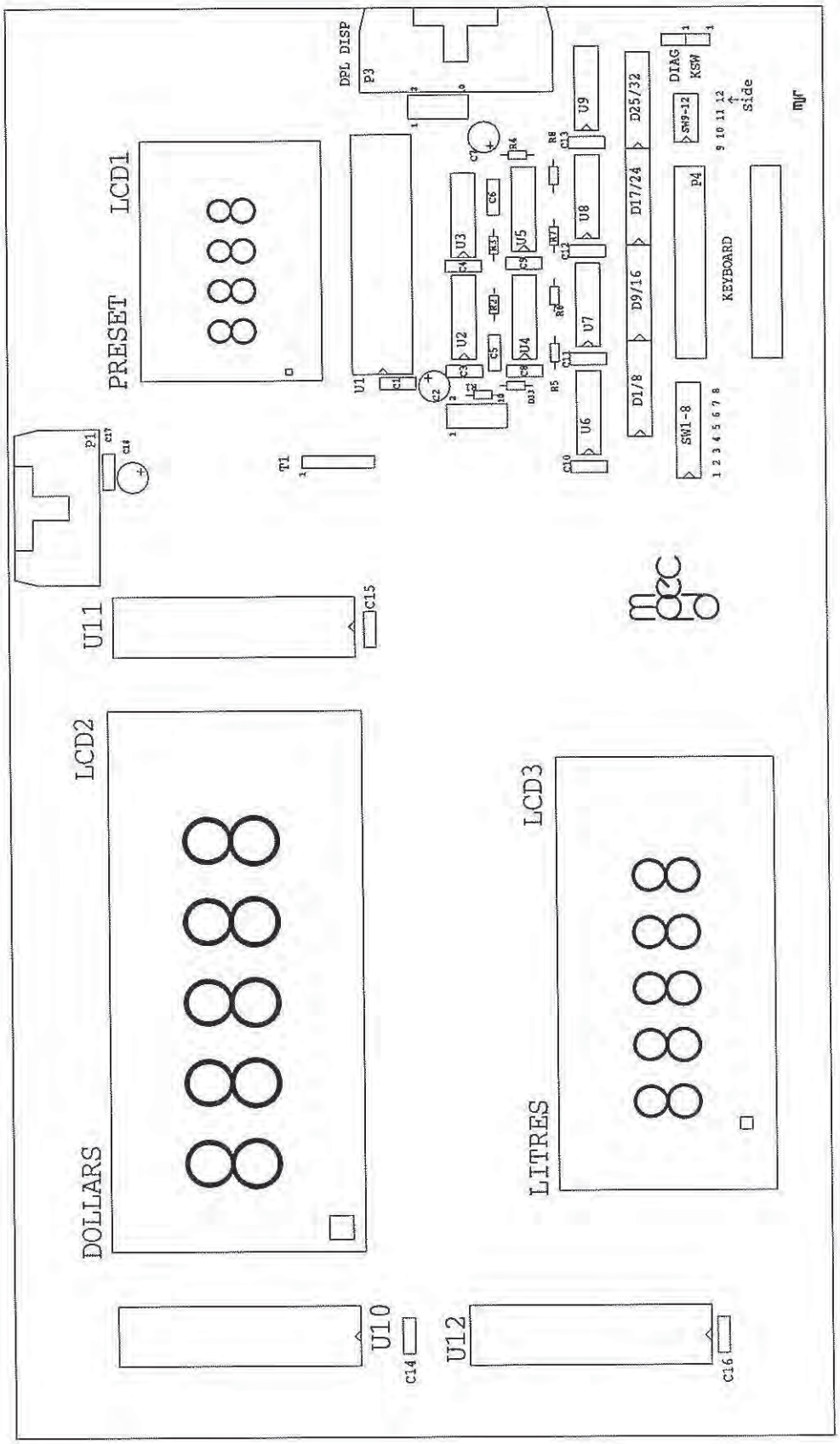

MPD Display PCB - 87121

Part	Description
..100E	Resistor 100E 0.5 W 5% SFR-16T
..1N4148	Diode 1N4148 silicon signal
..4047	4047 monostable multivibator
..4K7	Resistor 4K7 0.5 W 5% SFR-16T
..680K	Resistor 680K 0.5 W 5% SFR-16T
..74HCT08	74HCT08N quad 2 i/p and gate
..74HCT14	74HCT14 hex schmit trig invert
..74HCT164	74HCT164N 8-bit shift regist
..74HCT86	74HCT86 quad exclusive or gate
..HLCD0438A	HLCD0438AP LCD display driver
.87120	87120 V1 MPD display PCB-8000
841010	Cap 10 nF 63 V polyester ero
841070	Cap 1 µF 35 V tant dip bead
841540	Cap 220 nF 50 V monocap z5u
851110	LCD SP541PFA seiko 1" 5 digit
851120	LCD SP538PFA seiko 0.7" 5 digit
851130	LCD SP505PFA seiko 0.5" 4 digit
855640	Switch-multi DSS308 DIL 8 way
855770	Switch-multi DSS704 DIL 4 way
860580	Berg 68016-504 4W-S-STIK-G-RA
860960	Samtec SSA-120-SG 20W SKT STRP
861250	R&N IDH-10LP-SR3-TG RA low hdr
861370	Triomate 13 W membrane conntr
862860	Samtec SSA-132-SG 32W SKT STRP
864050	R&N IDH-16PK-SR3-TG RA header

Individual parts no longer available for replacement on site.
Repalce PCB by ordering part No 87121.

MPD Display PCB - 87121

Hex pump display PCB - 87126

Hex pump display PCB - 87126

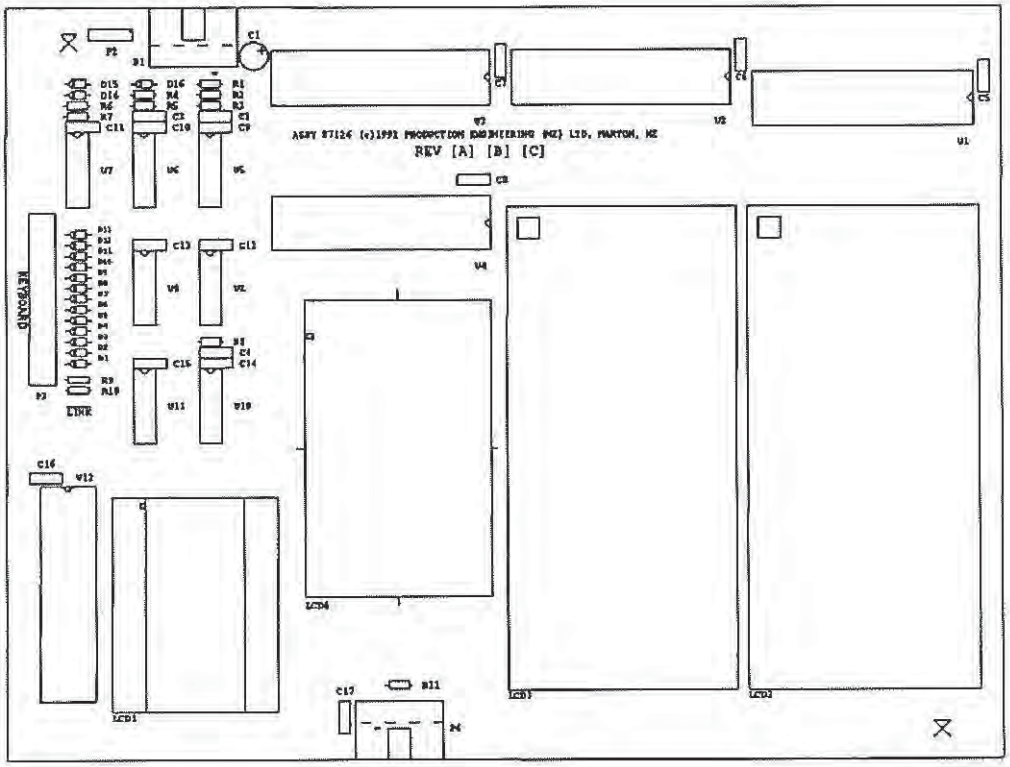

Hex pump display PCB - 87126

Part	Description
..100E	Resistor 100E 0.5W 5% SFR -16T
..10K	Resistor 10K 0.5W 5% SFR -16T
..1N4148	Diode 1N4148 silicon signal
..4047	4047 monostable multivibator
..680K	Resistor 680k 0.5w 5% SFR -16T
..74HCT00	74HCT00N quad 2 I/P NAND
..74HCT08	74HCT08N quad 2 I/P AND gate
..74HCT14	74HCT14 hex schmit trig invert
..74HCT164	74HCT164N 8-bit shift register
..74HCT86	74HCT86 quad exclusive or gate
..HLCD0438A	HLCD0438AP LCD display driver
.87125	87125 V1 MPD display PCB - LPG
841010	Cap 10nF 63V polyester ero
841070	Cap 1µF 35V tant dip bead
841540	Cap 220nF 50V monocap z5u
841780	Cap 100pF 100V npo ceramic
851110	LCD SP541PFA seiko 1" 5 digit
851125	LCD SP537PFA seiko 0.7"4 digit
851130	LCD SP505PFA seiko 0.5" 4 digit
860960	Samtec SSA-120-SG 20W skt strp
861250	R&N IDH-10IP-SR3-TG RA low hdr
861380	Berg 68016-513 13W-S-STIK-G-RA
862860	Samtec SSA-132-SG 32W SKT STRP
863340	Berg 68001-504 4W-S-STIK-G-ST

Individual parts no longer available for replacement on site .
Replace PCB by ordering part No .87126.

Hex pump display PCB - 87126

AC Control PCB - Dispenser - 87133

AC Control PCB - 87133

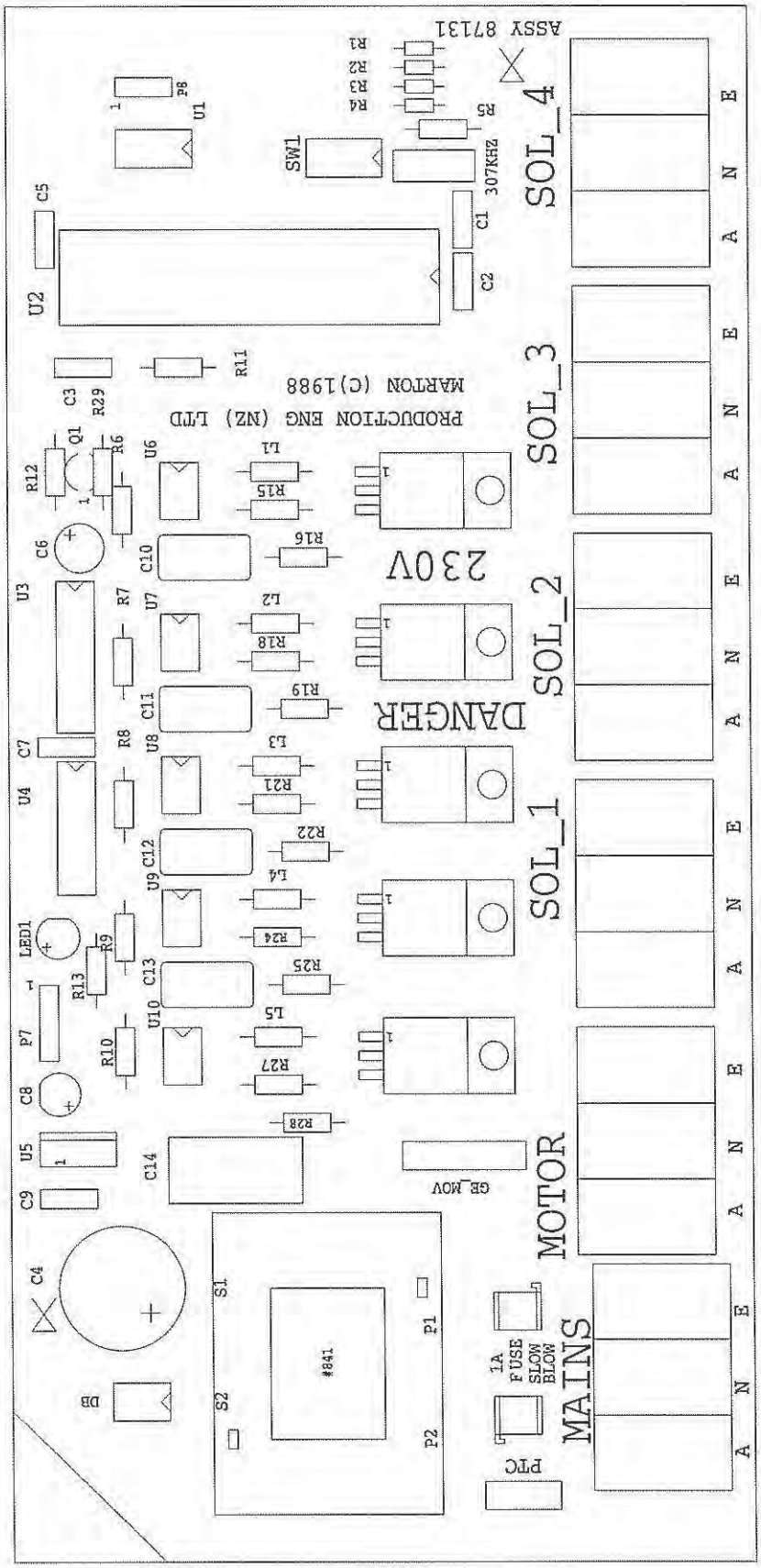

AC Control PCB - 87133

Part	Description
..0609	Triac T0609MJ (to 220)
..10K	Resistor 10K 0.5w 5% SFR-16T
..120E	Resistor 120E 0.5w 5% SFR-16T
..14469	Mc14469 addressable async RXTX
..1512	Triac T1512MJ 600 V/16 A ISO tag (Pre March 1st 1993)
..1612	Triac T1612MJ 600 V/16 A ISO tag (After March 1st 1993)
..15M	Resistor 15 m 1 W 5% VR-37
..1M0	Resistor 1M0 0.5 W 5% SFR-16T
..2200	Opto isolator HCPL-2200
..3061	MOC3061 opto triac driver
..330E	Resistor 330E 0.5 w 5% SFR-16T
..39K	Resistor 39K 0.5w 5% SFR-16T
..4098	4098 dual monostabl mulvibtr
..4K7	Resistor 4K7 0.5 W 5% SFR-16t
..680E	Resistor 680E 0.5 W 5% SFR-16t
..74HCT14	74HCT14 hex schmit trig invert
..LM340T5	Voltage reg lM340T-5 pos
..MPSA14	Transistor MPSA14 npn pwr1
.87130	87130 V1 AC control PCB
.87330	Transformer - AC control
800540	Screw steel M3 x 8 pan hd
803140	Nut full steel M3 (ajax)
804490	Washer internal fan disc M3
823630	Cable ties 180 mm TY525M
827710	Adhesive loctite "takpac"
835010	Bag static shield 152 mm x 254 mm
840430	Thermister ptc 113 mA 265 V
840450	Ge-mov varistor V275lA - 20 A
841070	Cap 1 µF 35 V tant dip bead
841310	Cap 47 pF 100 V npo ceramic
841540	Cap 220 nF 50 V monocap z5u
841680	Cap 2.2 nF 1000 Vmains suppres
841740	Cap 220 pF 100 V n75o ceramic
843350	Cap 2200 µF 25 V electro-radial
845060	Bridge rectifier GEDB1D 0.5 A
847040	Led red diffused Hi Eff 5 mm
852610	Resonator 307KHz CSB307D
852640	Inductor 560 µH 9250-564
855770	Switch-multi DSS704 dil 4 way
860830	Weco 3 W terminal block h/duty
863330	Berg 68001-503 3W-S-STIK-G-ST1
865110	Fuse 1 amp slo-blo (20 x 5)
865170	Fuse clip (pcb mnt) - 5 mm
883700	Label dispenser
	AC Control PCB Version 0 will be released at a later date. **Individual parts no longer available for replacement on site.** **Replace PCB by ordering part No.87133.**

AC Control PCB - 87133

AC Control PCB - Pump - 87132

AC Control PCB - 87132

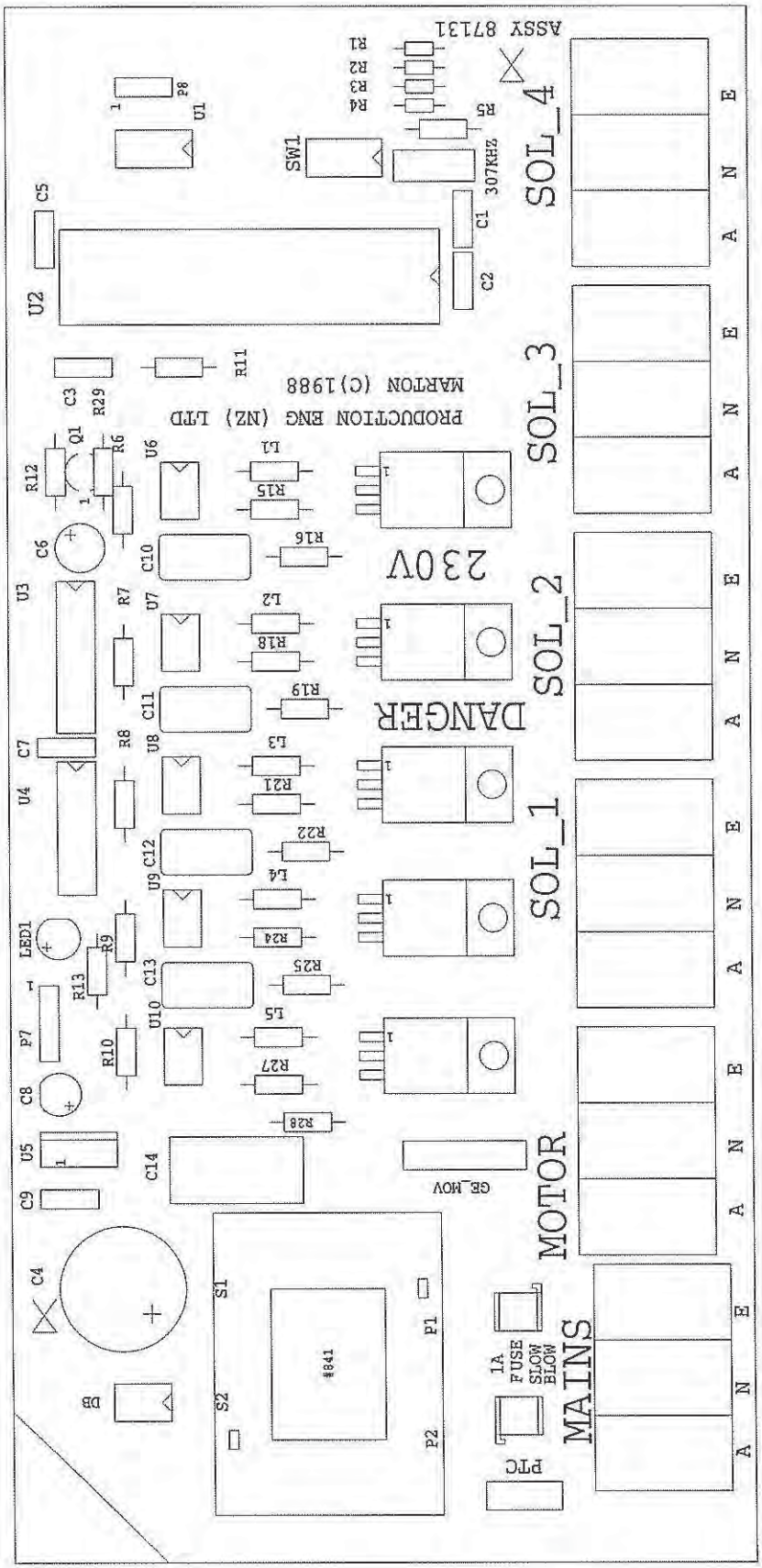

AC Control PCB - 87132

Part	Description
..0609	Triac T0609MJ (to 220)
..10K	Resistor 10K 0.5w 5% SFR-16T
..120E	Resistor 120E 0.5w 5% SFR-16T
..14469	Mc14469 addressable async RXTX
..1512	Triac T1512MJ 600 V/16 A ISO tag (Pre March 1st 1993)
..1612	Triac T1612MJ 600 V/16 A ISO tag (After March 1st 1993)
..15M	Resistor 15 m 1 W 5% VR-37
..1M0	Resistor 1M0 0.5 W 5% SFR-16T
..2200	Opto isolator HCPL-2200
..3061	MOC3061 opto triac driver
..330E	Resistor 330E 0.5 w 5% SFR-16T
..39K	Resistor 39K 0.5w 5% SFR-16T
..4098	4098 dual monostabl mulvibtr
..4K7	Resistor 4K7 0.5 W 5% SFR-16t
..5K6	Resistor 5K6 0.5 W 5% SFRr-16t
..680E	Resistor 680E 0.5 W 5% SFR-16t
..74HCT14	74HCT14 hex schmit trig invert
..LM340T5	Voltage reg lM340T-5 pos
..MPSA14	Transistor MPSA14 npn pwr
.87130	87130 V1 AC control PCB
.87330	Transformer - AC control
800540	Screw steel M3 x 8 pan hd
803140	Nut full steel M3 (ajax)
804490	Washer internal fan disc M3
823630	Cable ties 180 mm TY525M
827710	Adhesive loctite "takpac"
835010	Bag static shield 152 mm x 254 mm
840430	Thermister ptc 113 mA 265 V
840450	Ge-mov varistor V275lA - 20 A
841070	Cap 1 µF 35 V tant dip bead
841310	Cap 47 pF 100 V npo ceramic
841540	Cap 220 nF 50 V monocap z5u
841680	Cap 2.2 nF 1000 Vmains suppres
841740	Cap 220 pF 100 V n75o ceramic
841750	Cap suppressor mains 100nF
843350	Cap 2200 µF 25 V electro-radial
845060	Bridge rectifier GEDB1D 0.5 A
847010	Led red diffused 5 mm
852610	Resonator 307KHz CSB307D
852640	Inductor 560 µH 9250-564
855770	Switch-multi DSS704 dil 4 way
860830	Weco 3 W terminal block h/duty
863330	Berg 68001-503 3W-S-STIK-G-ST
865110	Fuse lamp slo-blo [20 x 5]
865170	Fuse clip [pcb mnt] 5mm
865170	Fuse 1 amp slo-blo (20 x 5)
883700	Label Pump
	AC Control PCB Version 0 will be released at a later date.
	Individual parts no longer available for replacement on site.
	Replace by oredering part No.87132.

AC Control PCB - 87132

Encoder Module PCB
- 87141

Encoder Module PCB - 87141

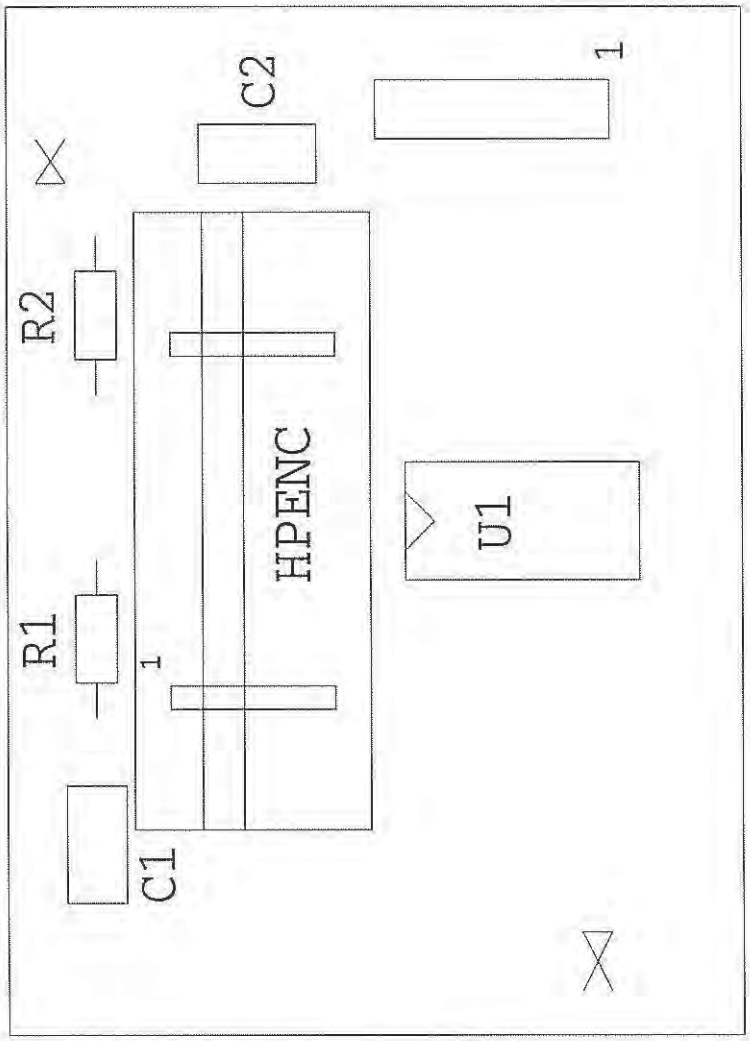

Encoder Module PCB - 87141

Part	Description
..10K	Resistor 10K 0.5 W 5% SFR-16T
..75451	75451BP dual peripheral drvr
..9100	Opto module heds 9100-C00
.87140	87140 V0 encoder module PCB
835020	Bag static shield 102 mm x 152 mm
841230	Cap 220 nF 50 V monocap z5u

Obsolete

Individual parts no longer available for replacement on site.
Replace PCB by ordering part No .87141.

Encoder Module PCB - 87141

Encoder series II PCB
- 87146

Encoder series II PCB - 87146

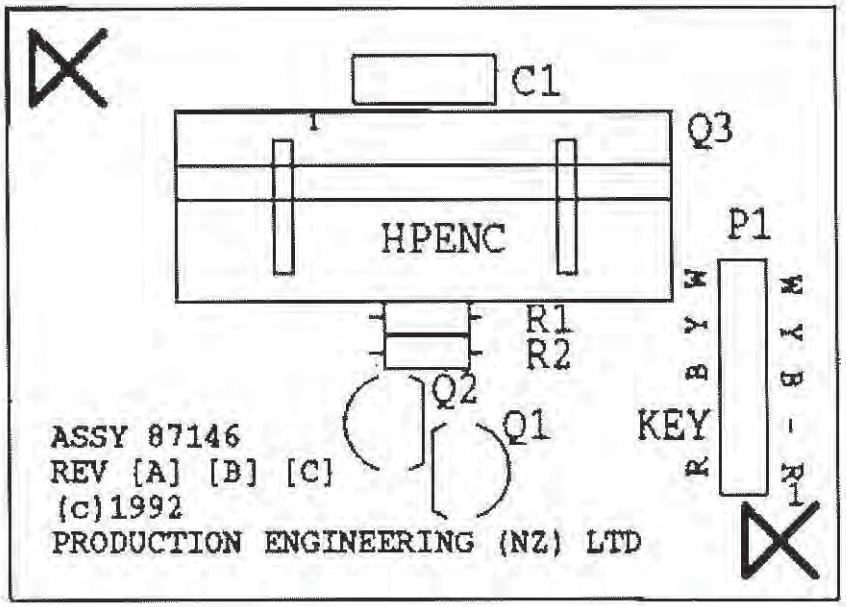

Encoder series II PCB - 87146

Part	Description
.87146	Encoder PCB assembly - Series
..10K	Resistor 10K 0.5W 5% SFR-16T
..9100	OPTO Module HEDS 9100-C00
..BC548B	Transistor BC548B NPN
.87145	87145 V0 Encoder PCB - SERIES II
841540	CAP 220 nF 50V Monocap Z5U

Replaces "Encoder module PCB - 87141"

Individual parts no longer available for replacement on site.
Replace PCB by ordering part No.87146.

Encoder series II PCB - 87146

Power Supply PCB
- 87151

Power Supply PCB - 87151

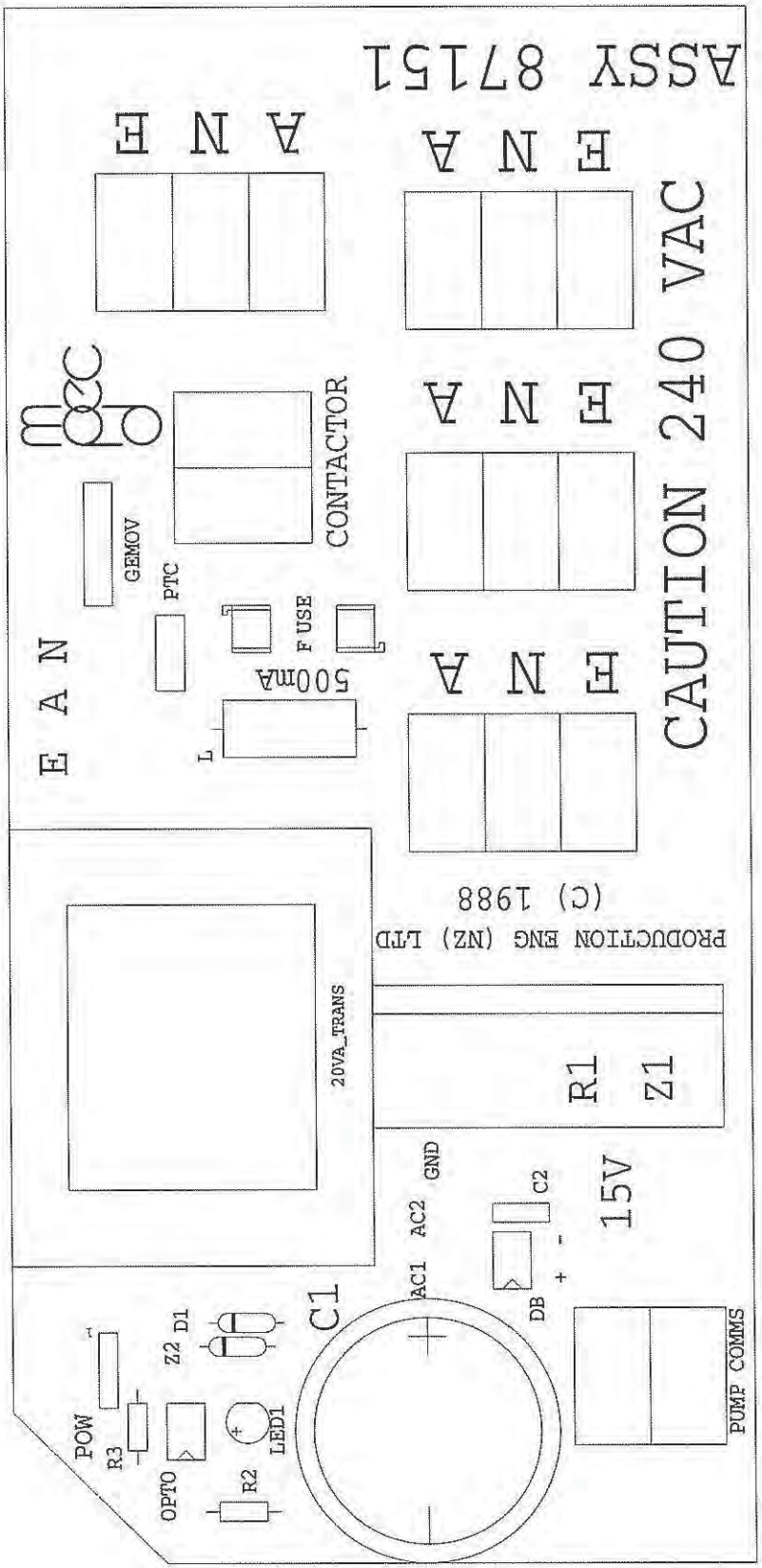

Power Supply PCB - 87151

Part	Description
..100K	Resistor 100K 0.5 W 5% SFR-16T
..1N4148	Diode 1N4148 silicon signal
..220E	Resistor 220E 0.5W 5% SFR-16T
..4N33	GE4N33 opto isolator
..BZV85C10	Diode zener BZV85C10 1 watt
..BZY93C15	Diode zener BZY93C15R 20 watt
.87150	87150 V1 J/box power supply PCB
.87331	Heatsink - MPD/MPP power supply
.87350	Transformer - intrinsic mains
800085	Screw steel M3 x 35 pan hd
800460	Screw steel M2.5 x 10 ch hd
803130	Nut full steel M2.5
803140	Nut full steel M3 (ajax)
804400	Washer flat steel M3
804490	Washer internal fan disc M3
835010	Bag static shield 152 mm x 254 mm
840115	Thermister PTC 100 mA 265 V
840225	Resistor 22E 15W 5% w/wound
840450	Ge-mov varistor V275LA-20 A
841540	Cap 220 nF 50V monocap z5u
843400	Cap 6800µF 35 V electro-radial
845060	Bridge rectifier GEDB1D 0.5 A
847040	Led red diff hi-eff 5 mm
852410	Inductor TD269 150 µH
860830	Weco 3 W terminal block h/duty
860910	Weco 2 W terminal block h/duty
862600	Utilux H4115 crimp lug 5 mm
863340	Berg 68001-504 4W-S-STIK-G-ST
865170	Fuse clip (PCB mnt)-5 mm
866640	Fuse 500 mA std small (20 x 5)
868250	Wire 0.5 mm² single lighting or
868340	Wire 0.5 mm² single lighting bk
868350	Wire 0.5 mm² single lighting rd
868653	Heatshrink tube ³/₈" red

Power Supply PCB Version 0 will be released at a later date.

Individual parts no longer available for replacement on site.
Replace by ordering part No .87151.

Power Supply PCB - 87151

3 Product, Dollars per Litre Display PCB - 87201

3 Product Dollars per Litre Display PCB - 87201

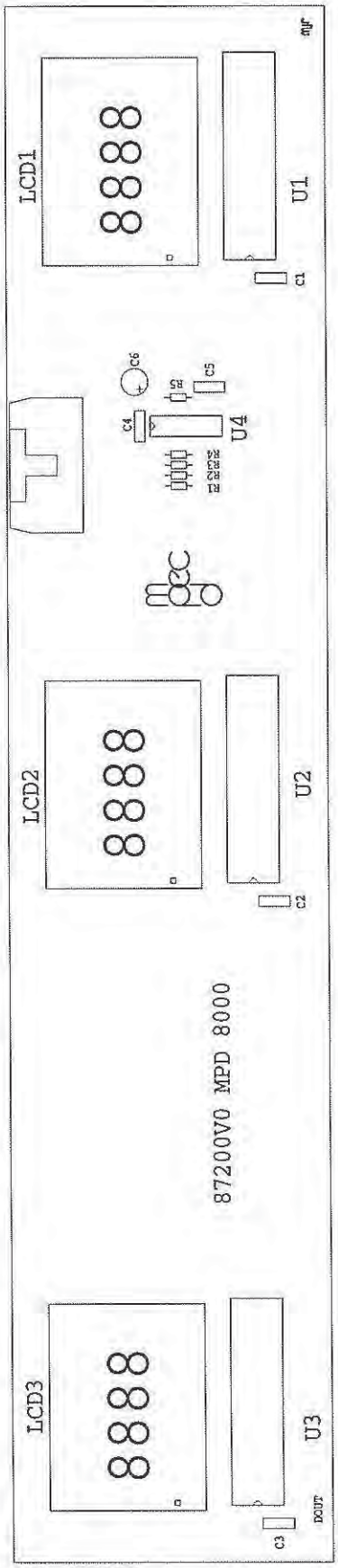

3 Product Dollars per Litre Display PCB - 87201

Part	Description
..100E	Resistor 100E 0.5 W 5% SFR-16T
..47K	Resistor 47K 0.5 W 5% SFR-16T
..74HCT14	74HCT14 hex schmit trig invert
..HLCD0438A	HLCD0438AP LCD display driver
.87200	87200 V0 3 prod DPL PCB - 0.5"
841010	Cap 10 nF 63 V polyester ero
841070	Cap 1 µF 35 V tant dip bead
841540	Cap 220 nF 50 V monocap z5u
851130	LCD SP505PFA seiko 0.5" 4 digit
860960	Samtec SSA-120-SG 20W SKT STRP
864040	R&N IDH-10PK-SR3-TG RA header

Individual parts no longer available for replacement on site.
Replace PCB by ordering part No .87201.

3 Product Dollars per Litre Display PCB - 87201

Zener barrier PCB
- 87236

Zener barrier PCB - 87136

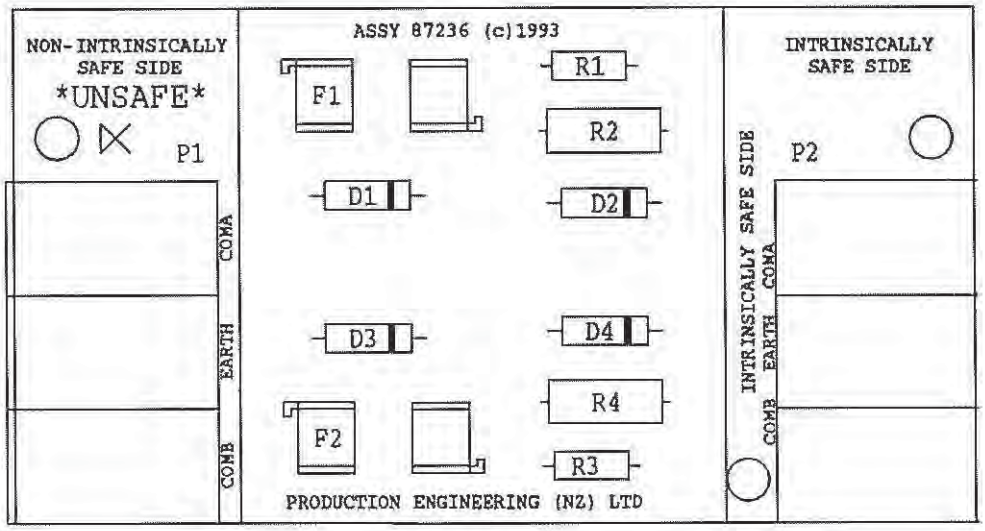

Zener barrier PCB - 87236

Part	Description
..10E	Resistor 10E 0.5W 5% SFR -16T
..BZW03C15	Diode zener BZW03-C15 15V 6W
.87235	87235 V1 zenner barrier PCB
840050	Resistor 100E 1.6W 5% MTL FLM
860830	Weco 3w terminal block h/duty
865100	Fuse 50 mA ceramic (16 x 4.7)
865170	Fuse clip (PCB mnt) - 5 mm

Individual parts no longer available for replacement on site.
Replace PCB by ordering part No .87236.

Zener barrier PCB - 87136

2 Product, Dollars per Litre Display PCB - 87241

2 Product Dollars per Litre Display PCB - 87241

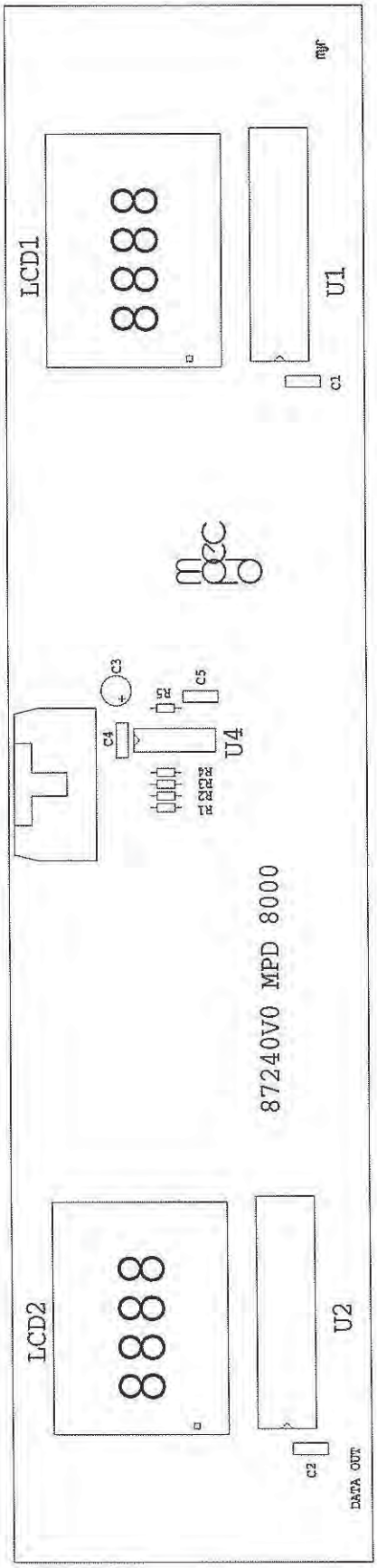

2 Product Dollars per Litre DIsplay PCB - 87241

Part	Description
..100E	Resistor 100E 0.5 W 5% SFR-16T
..47K	Resistor 47K 0.5 W 5% SFR-16T
..74HCT14	74HCT14 hex schmit trig invert
..HLCD0438A	HLCD0438AP LCD display driver
.87240	87240 V0 2 prod DPL PCB-0.5"
841010	Cap 10 nF 63 V polyester ero
841070	Cap 1 µF 35 V tant dip bead
841540	Cap 220 nF 50 V monocap z5u
851130	LCD SP505PFA seiko 0.5" 4 digit
860960	Samtec SSA-120-SG 20W SKT STRP
864040	R&N IDH-10PK-SR3-TG RA header

Individual parts no longer available for replacement on site.
Replace by ordering part No.87241.

2 Product Dollars per Litre Display PCB - 87241

Single Price Display PCB - 87271

Single Price Display PCB - 87271

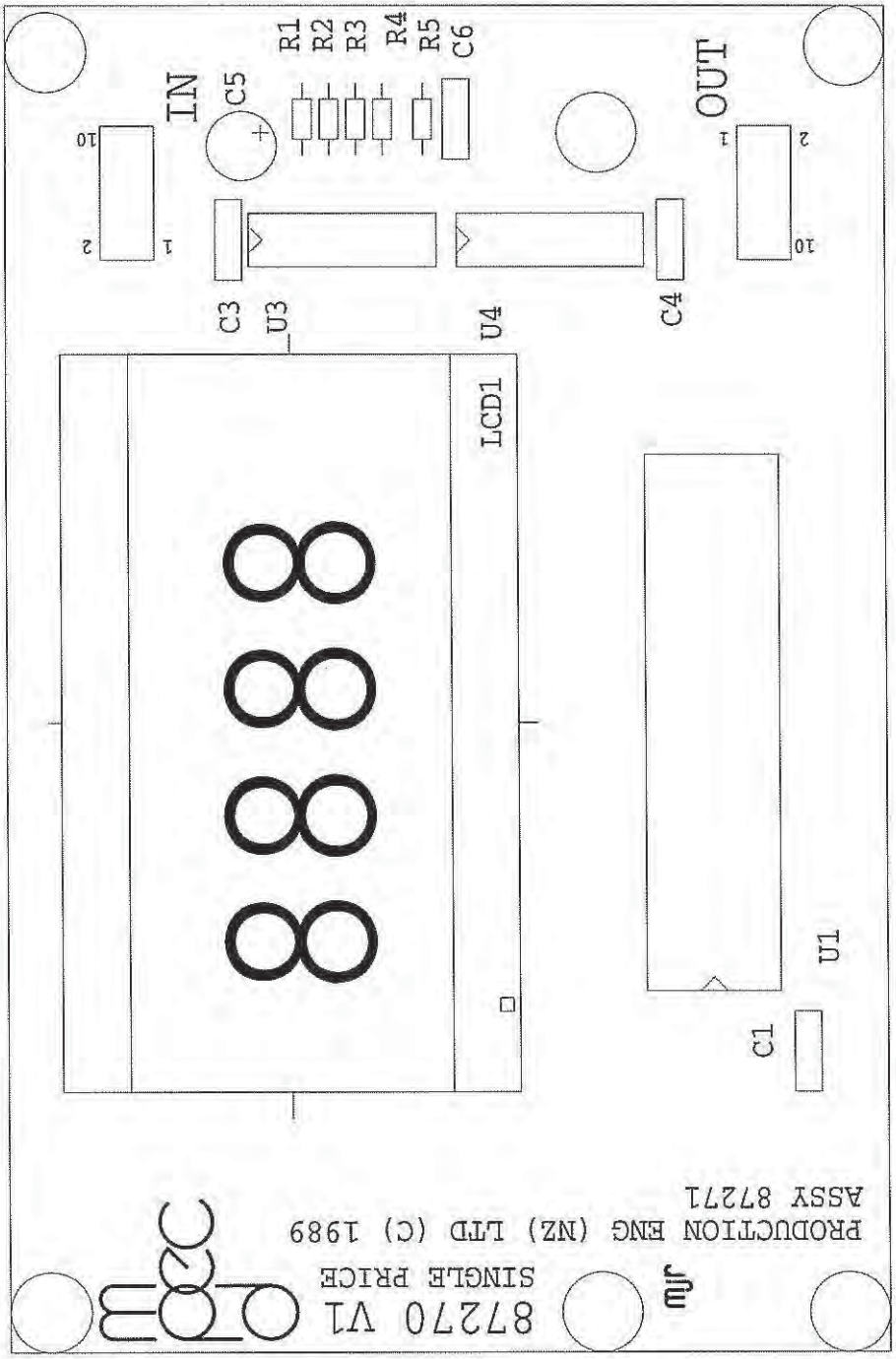

Single Price Display PCB - 87271

Part	Description
..100E	Resistor 100E 0.5 W 5% SFR-16T
..47K	Resistor 47K 0.5 W 5% SFR-16T
..74HCT14	74HCT14 hex schmit trig invert
..HLCD0438A	HLCD0438AP LCD display driver
.87270	87270 V1 single price .7"
834180	Tape leukoflex 25 mm x 5 m roll
835010	Bag static shield 152 mm x 254 mm
841010	Cap 10 nF 63 V polyester ero
841070	Cap 1 µF 35 V tant dip bead
841540	Cap 220 nF 50 V monocap z5u
851125	LCD SP537PFA seiko 0.7" 4 digit
860960	Samtec SSA-120-SG 20W SKT STRP
861250	R&N IDH-10LP-SR3-TG RA low hdr

Single Price Display PCB Version 0 will be released at a later date.

Individual parts no longer available for replacement on site.
Replace PCB by ordering part No .87271.

Single Price Display PCB - 87271

Dollars & Litres Display PCB - 87276

Dollars & Litres Display PCB - 87276

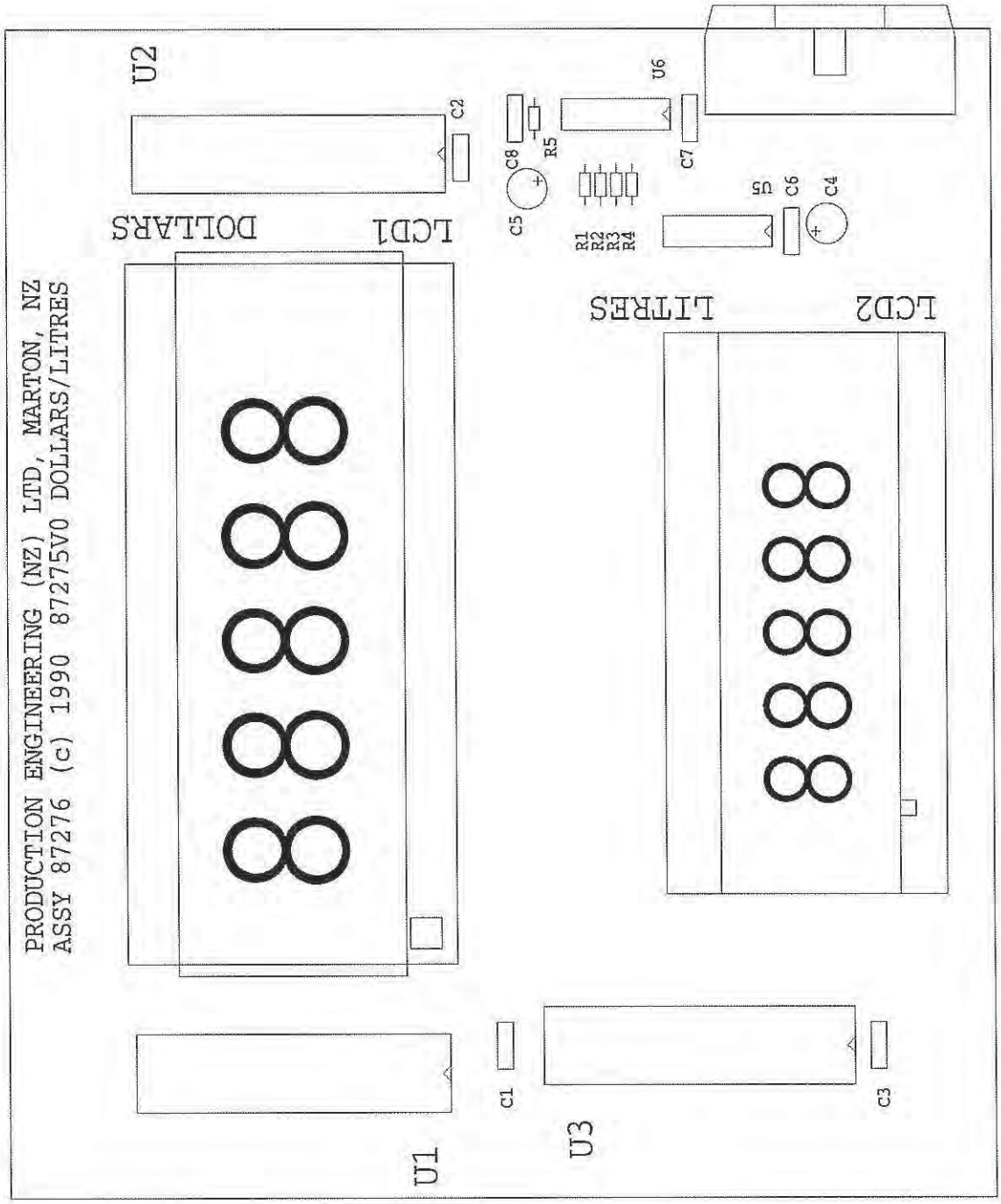

Dollars & Litres Display PCB - 87276

Part	Description
..100E	Resistor 100E 0.5 W 5% SFR-16T
..47K	Resistor 47K 0.5 W 5% SFR-16T
..74HCT14	74HCT14 hex schmit trig invert
..HLCD0438A	HLCD0438AP LCD display driver
.87275	87275 V0 dollars & litres PCB
835000	Bag static shield 305 mm x 406 mm
841010	Cap 10 nF 63 V polyester ero
841070	Cap 1 µf 35 V tant dip bead
841540	Cap 220 nF 50 V monocap z5u
851110	LCD SP541PFA seiko 1" 5 digit
851120	LCD SP538PFA seiko 0.7" 5 digit
862860	Samtec SSA-132-SG 32 W SKT STRP
864050	R&N IDH-16PK-SR3-TG RA header

Individual parts no longer available for replacement on site.
Replace PCB by ordering part No .87276.

Dollars & Litres Display PCB - 87276

Preset Display PCB
- 87281

Preset Display PCB - 87281

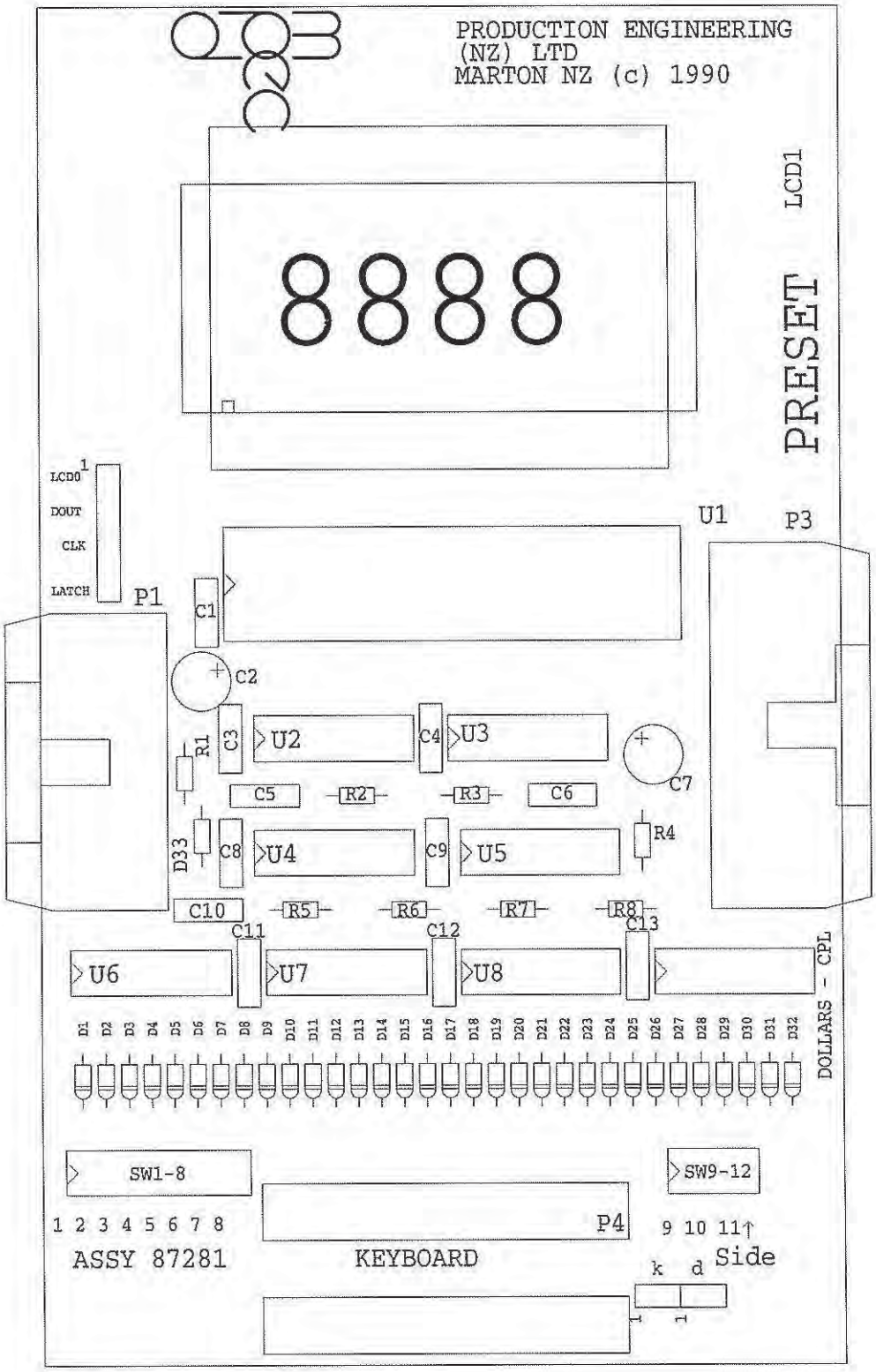

Preset Display PCB - 87281

Part	Description
..100E	Resistor 100E 0.5 W 5% SFR-16T
..1N4148	Diode 1N4148 silicon signal
..4047	4047 monostable multivibator
..4K7	Resistor 4K7 0.5 W 5% SFR-16T
..680K	Resistor 680K 0.5 W 5% SFR-16T
..74HCT08	74HCT08N quad 2 i/p and gate
..74HCT14	74HCT14 hex schmit trig invert
..74HCT164	74HCT164N 8-bit shift register
..74HCT86	74HCT86 quad exclusive or gate
..HLCD0438A	HLCD0438AP LCD display driver
.87280	87280 V2 preset PCB - 9000
835010	Bag static shield 152 mm x 254 mm
841010	Cap 10 nF 63 V polyester ero
841070	Cap 1 µF 35 V tant dip bead
841540	Cap 220 nF 50 V monocap z5u
841780	Cap 100 pA 100 A npo ceramic
851130	LCD SP505PFA seiko 0.5" 4 digit
854800	Switch-multi DSS702 dil 2 way
855640	Switch-multi DSS308 dil 8 way
860580	Berg 68016-504 4W-S-STIK-G-RA
860960	Samtec ssa-120-sg 20 W SKT STRP
861240	R&N IDH-16LP-SR3-TG RA low hdr
861250	R&N IDH-10LP-SR3-TG RA low hdr
861380	Berg 68016-513 13W-S-STIK-G-RA

Preset Display PCB Version 0 & 1 will be released at a later date.

Individual parts no longer available for replacement on site.
Replace PCB by ordering part No .87281.

Preset Display PCB - 87281

Totes PCB V2
- 87286

Totes PCB V2 - 87286

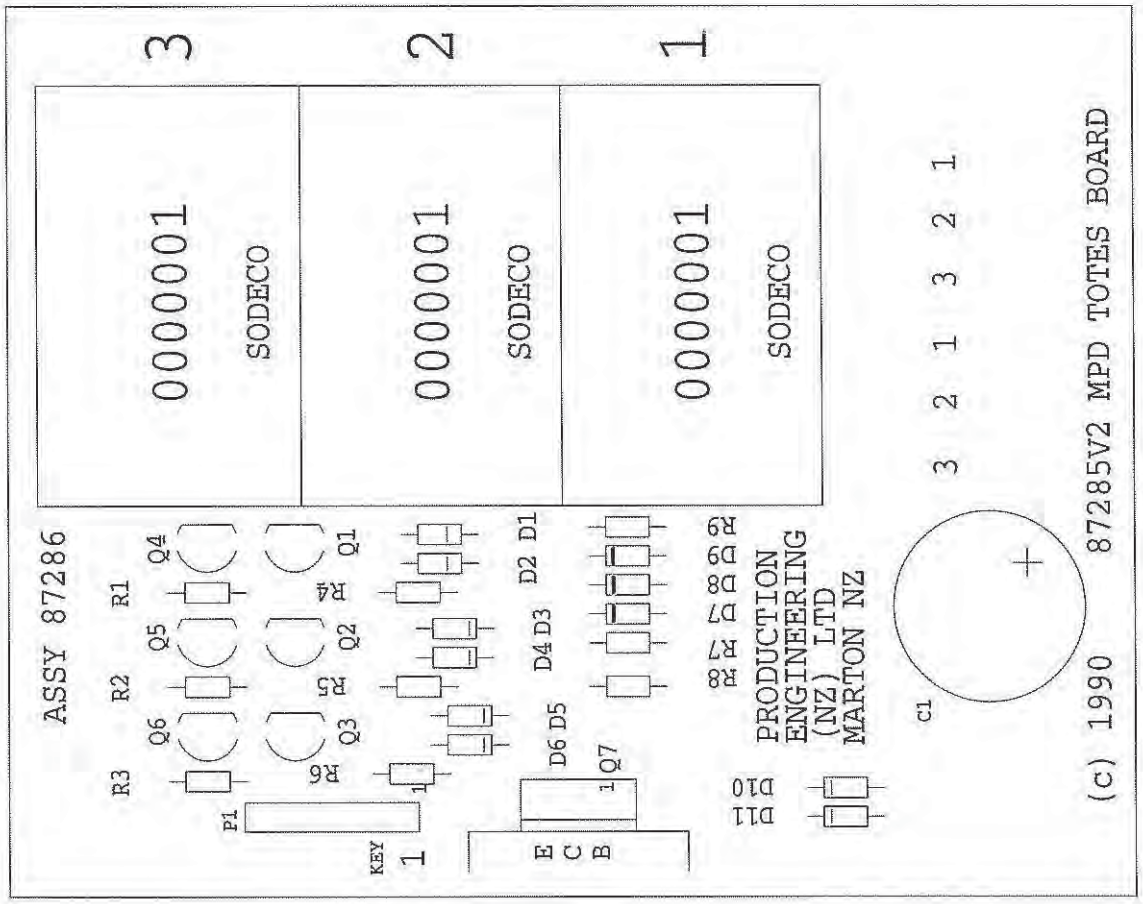

Totes PCB V2 - 87285

Part	Description
..1N4148	Diode 1N4148 silicon signal
..27E	Resistor 27E 0.5 W 5% SFR-16T
..3K3	Resistor 3K3 0.5 W 5% SFR-16T
..4K7	Resistor 4K7 0.5 W 5% SFR-16T
..BC517	Transistor BC517 npn pwr darl
..BC548B	Transistor BC548B npn
..BZV85C15	Diode zener BZV85C15 1watt
..TIP49	Transistor TIP49 npn high pwr
.87285	87285 V2 tote PCB
827710	Adhesive loctite "takpac"
835010	Bag static shield 152 mm x 254 mm
843350	Cap 2200 µF 25V electro-radial
863350	Berg 68001-506 6W-S-STIK-G-ST

Totes PCB Versions 0 & 1 will be released at a later date.

Individual parts no longer available for replacement on site.
Replace PCB by ordering part No 87285.

Totes PCB V2 - 87286

Standard parts

Contents

Flow meter - Tatsuno MP-02515G S-1
Solenoid valve assembly - ASCO S-5
Solenoid valve assembly LPG - ASCO S-11
Hose assembly - crimped S-21
Hose assembly - LPG S-25
ZVA nozzle assembly - 3/4 & 1 inch S-31
Gas Guard nozzle S-37
Tatsuno pump (PGS-0257) & air separator S-41

June 1994

Flow Meter - Tatsuno MP-02515G

Part 820030

Flow Meter - Tatsuno

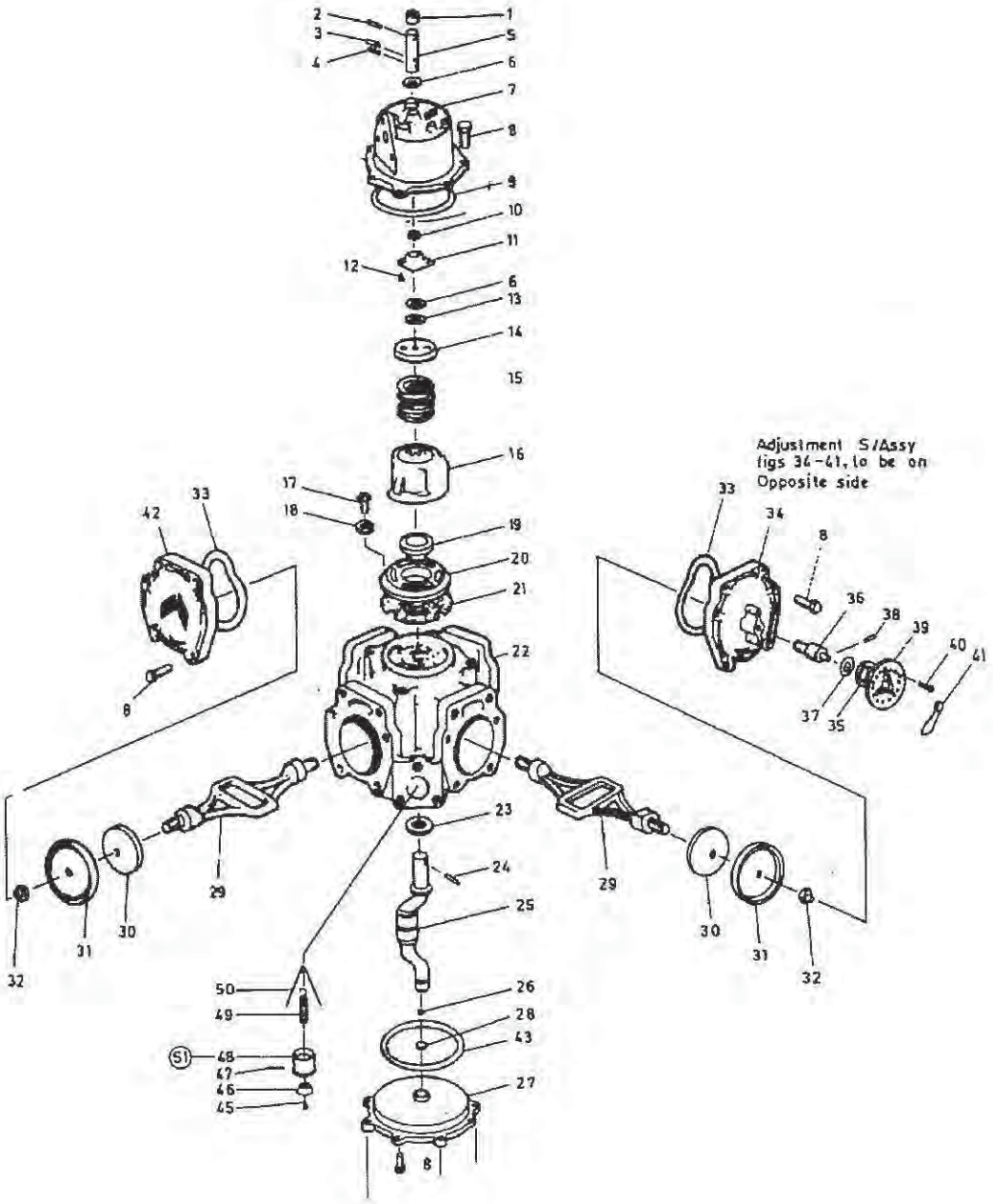

Flow Meter - Tatsuno

Item	Part No	Description		Qty
A	820030	Flow Meter TATSUNO MP-02515G		
1	..909/1	Joint		
2	..909/2	Tension Pin		
3	..909/3	Tension Pin		1
4	..909/4	Tension Pin	Upper Cover Assembly (..909/102)	
5	..909/5	Shaft		
6	..909/6	Washer		
7	..909/7	Upper Cover		
8	.80100	Set Screw Engrs. M8 x 22 mm		32
9	..909/9	"O" Ring G-100 (-242 Vix-Syn)		1
10	..909/10	Oil Seal		
11	..909/11	Retainer		
12		Counter Sunk Set Screw	Upper Cover Assembly (continued)	1
13	..909/13	Red Fibre Washer		
14	..909/14	Spring Plate		
15	..909/15	Slide Valve Spring		1
16	..909/16	Slide Valve		1
17		Cheese Hd. Set Screw		
18		Spring Washer		
19	..909/19	Sleeve	Body & Valve Seat Assy (..909/101)	
20	..909/20	Valve Seat		
21	..909/21	Body Valve Gasket		
22	..909/22	Body		
23	..909/23	Washer		1
24	..909/24	Pin		1
25	..909/25	Crank Shaft Assembly		1
26	..909/26	Ball		1
27	..909/27	Lower Cover		1
28	..909/28	Washer		1
29	..909/29	Connecting Rod		1
30	..909/30	Piston		4
31	..909/31	Retainer		4
32	..909/32	Nut M10		4
33	..909/33	Gasket		4
34	..909/34	Piston Cover for Adjust Handle		
35	..909/35	Adjustment Washer		
36	..909/36	Shaft	Piston Cover Assy with Adjust Handle	
37	..909/37	"O" Ring		1
38	..909/38	Tension Pin		
39	..909/39	Adjust Handle		
40	..909/40	Pin		1
41	..909/41	Lead Seal with Wire		1
42	..909/42	Piston Cover		3
43	..909/43	"O" Ring G-110 (-245 Vix-Syn)		1
45	806100	Cotter Pin 2.5 mm x 20 mm		1
46	.85854	Valve		1
47	.85852	Limit Pin	Flow Valve Body sub-assembly .85853	1
48	.85851	Body		1
49	.85856	Spring		1
50	.85855	Spring Retainer		1
51	.85850	Flow Valve Assembly (Optional)		1

Flow Meter - Tatsuno

Flow Meter - Tatsuno Piston Type MP-02515-G

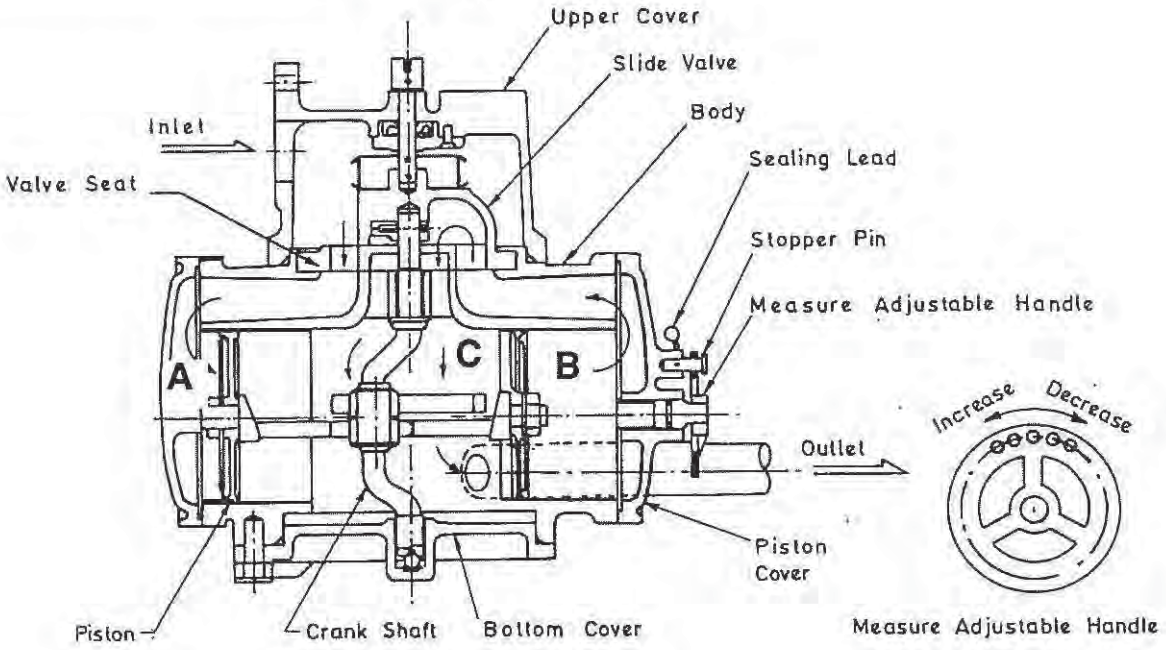

Operation

1. Petrol sent from the pump enters the cylinder through the slide valve, pressing the piston A side inward.
2. Then the B side piston is pushed outward and petrol in the cylinder B is sent to C through the slide valve opening and discharged from Outlet.
3. When the four pistons reciprocate alternately, the connecting rods drive the crankshaft, the movement of which is transmitted to the counter.

Adjustment of flow rate

The flow rate can be adjusted by varying the stroke of the pistons. Turning the measure adjusting handle clockwise will increase the instrumental error while turning counter-clockwise will decrease it.

One pitch turn varies the flow by 0.04%. It can be adjusted up to ± 0.64%.

Solenoid Valve Assembly - ASCO

Solenoid Valve Assembly ASCO

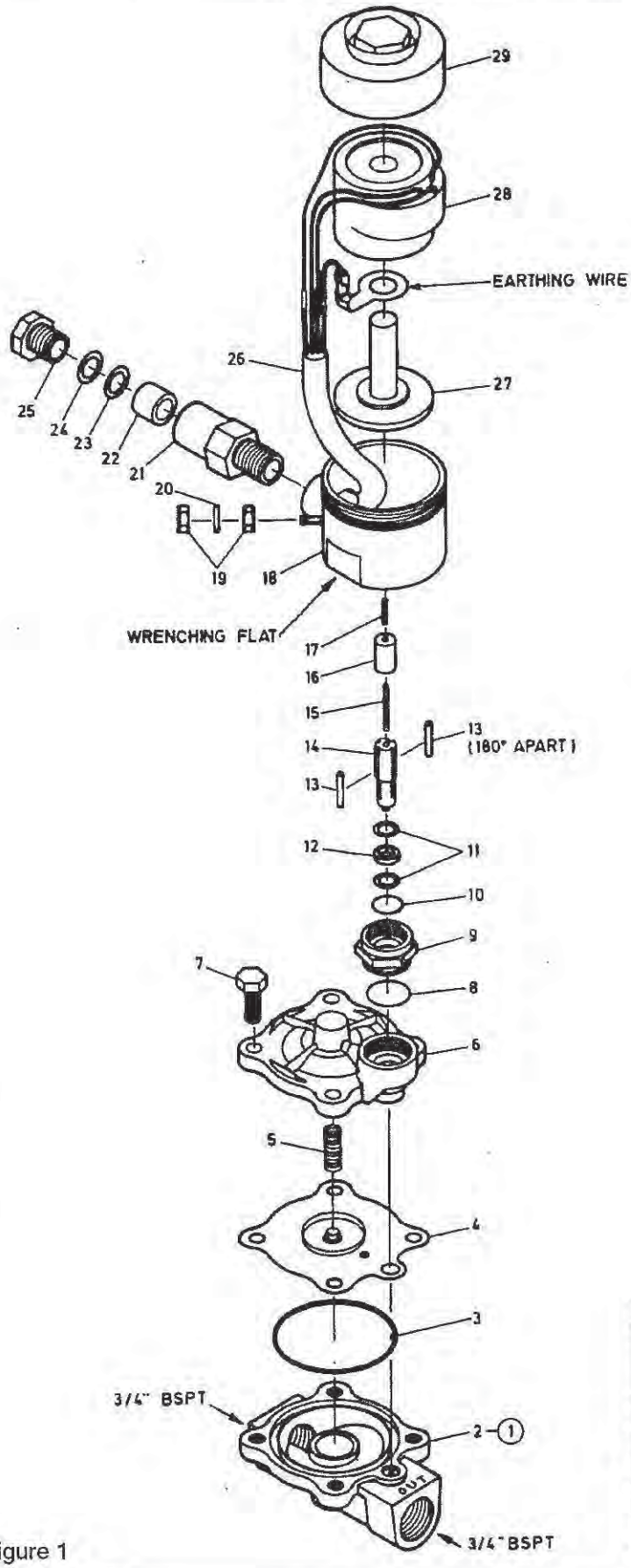

Figure 1

TORQUE CHART		
Part Name	Torque Value Inch-Pounds	Torque Value Newton-Meters
Housing	110 ± 10	12·4 ± 1·1
Solenoid Base Sub-Assembly	90 ± 10	10·2 ± 1·1
Adapter	175 ± 25	19·8 ± 2·8
Bonnet Screws	144 ± 15	16·3 ± 1·7

Solenoid Valve Assembly ASCO

Item	Part No	Description	Qty
1	852530	Solenoid Valve ASCO 3/4" # 829212	1
2		Valve Body	1
3		Body Gasket	1
4		Diaphragm Assembly	1
5		Diaphragm Spring	1
6		Valve Bonnet	1
7		Bonnet Screw	4
8		Adaptor Gasket	1
9		Adaptor	1
10		Solenoid Base Gasket	1
11		Washers	2
12		Cushon	1
13		Pins (180 Deg. Apart)	2
14		Lower Core Assembly	1
15		Lower Core Spring (Long)	1
16		Upper Core Assembly	1
17		Upper Core Spring (Short)	1
18		Housing with Nameplate	1
19		Nuts	2
20		Lock Washer	1
21		Gland Body	1
22		Neoprene Seal	1
23		Brass Washer	1
24		Fibre Washer	1
25		Nut	1
26		Power Lead	1
27		Solenoid Base Sub - Assembly	1
28		Coil with Lead Wires	1
29		Cover	1
30	824310A	SCO Diaphram Kit - K3653 [includes items 3 to 5, 8, 10, 12 to 17)	
31	824340	ASCO Valve Coil Assembly #829212	

Solenoid Valve Assembly ASCO

Operation

Normally Closed Operation

No Flow Mode: With solenoid windings 'A' and 'B' de-energised, valve is closed (no flow)

Low Flow Mode: With solenoid windings 'A' (yellow lead wire and red common) energised, valve will have low flow.

Full Flow Mode: With solenoid winding 'A' (yellow lead wire and red common) and winding 'B' (black lead wire and red common) energised, valve will have full flow.

Caution: Both windings 'A' and 'B' must be energised to have full flow mode.

Important:

Minimum operating pressure differential 5 psi.
Maximum operating pressure differential 50 psi.

Installation

Piping

Apply pipe compound sparingly to male pipe threads only. If applied to valve threads, the compound may enter the valve and cause operational difficultly. Avoid pipe strain by properly supporting and aligning piping. When tightening the pipe, do not use valve or solenoid as a lever. Locate wrenches applied to the valve body or piping as close as possible to connection point.

Solenoid Temperature

Standard catalog valves are supplied with coils designed for continuous duty service. When the solenoid is energised for a long period, the solenoid enclosure becomes hot and can be touched by hand only for an instant. This is a safe operating temperature. Any excessive heating will be indicated by the smoke and odour of burning coil insulation.

Maintenance

Causes of Improper Operation

1. Faulty Control Circuits: Check the electrical system by energising the solenoid (both windings). A metallic 'click' signifies that the solenoid is operating. Absence so the 'click' indicates loss of power supply. Check for loose or blown fuses, open circuited or grounded coil, broken lead wires or splice connections.
2. Burned-Out Coil: Check for open-circuited coil (both windings). Replace coil as necessary. Check supply voltage; it must be the same as specified on nameplate and marked on the coil.
3. Low Voltage: Check voltage across the coil lead. Voltage must be at least 85% of nameplate rating.
4. Incorrect Pressure: Check valve pressure. Pressure to valve must be within range specified on nameplate.
5. Excessive Leakage: Disassemble valve and clean all parts. Replace worn or damaged parts. However, for best results, replace all parts as supplied with an ASCO Rebuild Kit.

Coil Replacement

Warning: Turn off electrical power supply.

1. Disconnect coil lead wires, grounding wire (if present), and rigid conduit from the solenoid enclosure.
2. Unscrew housing cover.
3. Slip coil with leads and grounding wire off the solenoid base sub assembly.
4. Install new coil.
5. Reassemble in reverse order of disassembly. Use exploded view for identification and placement of parts.
6. Torque housing cover to 100 +/- 10 inch-pounds (12.4 +/- 1.1 newton-metres).

If the coil assembly is potted it can not be removed from the house assembly. The whole coil & house assembly must be removed from the valve and replaced.

Caution: Solenoid must be fully reassembled because housing and internal parts complete the magnetic circuit.

Solenoid Valve Assembly ASCO

Valve Disassembly

Warning: Depressurise valve and turn off electrical power supply.

1. Disassembly valve in an orderly fashion. Use the exploded view for identification and placement of parts (**figure 1**).
2. Unscrew housing cover.
3. Slip coil with leads off the solenoid base sub-assembly.
4. If present, remove grounding wire from solenoid base sub-assembly.
5. Unscrew solenoid base assembly.
6. Remove the following parts:
   * upper core spring
   * upper core assembly
   * lower core spring
   * pins (2)
   * lower core assembly
   * solenoid base gasket
   * washer
   * cushion
   * washer
7. Unscrew adapter and remove adapter gasket.
8. For normal maintenance (cleaning) it is not necessary to remove the valve seat (RC1/25 construction only). However, for valve seat removal use a 7/16" thin wall socket wrench.
9. Remove bonnet screws and disassemble bonnet, diaphragm, spring, and gasket from body.
10. All parts are now accessible for cleaning or replacement. However, for best results, replace all parts as supplied with an ASCO Rebuild Kit.

Valve Reassembly

1. Reassemble parts in reverse order of disassembly. Use exploded view for identification and placement of parts.
2. Lubricate all gaskets with DOW CORNING 111 Compound lubricant or an equivalent high-grade silicone grease.
3. Replace body gasket, diaphragm spring, and bonnet screws. Torque bonnet screws in a crisscross manner to 144 +/- 15 inch-pounds (16.3 +/- 1.7 newton-metres).
4. If removed, replace valve seat (RC1/25 construction only) with a small amount of thread compound on male threads to avoid possible leakage. Torque valve seat to 65 +/- 15 inch-pounds (7.3 +/- 1.7 newton-metres).
5. Position adapter gasket in valve body.
6. Holding the solenoid base sub-assembly in a horizontal position, reassemble the parts as follows:

   A Install upper core spring in upper core assembly and into solenoid base sub assembly.
   B Install lower core spring into lower core assembly and into solenoid base sub-assembly.
   Note: Push lower core assembly and into solenoid base sub-assembly.
   C Install pins (180 deg) into grooves of lower core assembly.
   D Position washer, cushion, and washer on lower core assembly.
   E Install solenoid base gasket in adapter.
   F Position the solenoid base sub-assembly in the housing.
   G Engage adapter with adapter gasket to solenoid base sub-assembly (hand tighten only)
   Note: Check this assembly by pushing lower core assembly into the solenoid base sub-assembly. Core assembly should move freely and return.

7. Holding adapter securely in a vice, torque the solenoid base sub-assembly to 90 +/- 10 inch-pounds (10.2 +/- 1.1 newton-metres)

Solenoid Valve Assembly ASCO

8. Engage adapter/solenoid base sub-assembly with valve body. Torque adapter to 175 +/- 25 inch-pounds (19.8 +/- 2.8 newton-metres).
9. Slip coil over solenoid base sub-assembly and the read coil lead wires through the centre of the conduit hub on housing. Then torque housing to 110 +/- 10 inch-pounds (12.4 +/- 1.1 newton-metres).
10. Make electrical hookup to solenoid.
11. Restore line pressure and electrical power supply to valve.
12. After maintenance is complete, operate the valve a few times to be sure of proper operation. A metallic 'click' signifies the solenoid is operating.

Solenoid valve assembly
LPG - ASCO

Solenoid valve assembly LPG - ¾" high flow

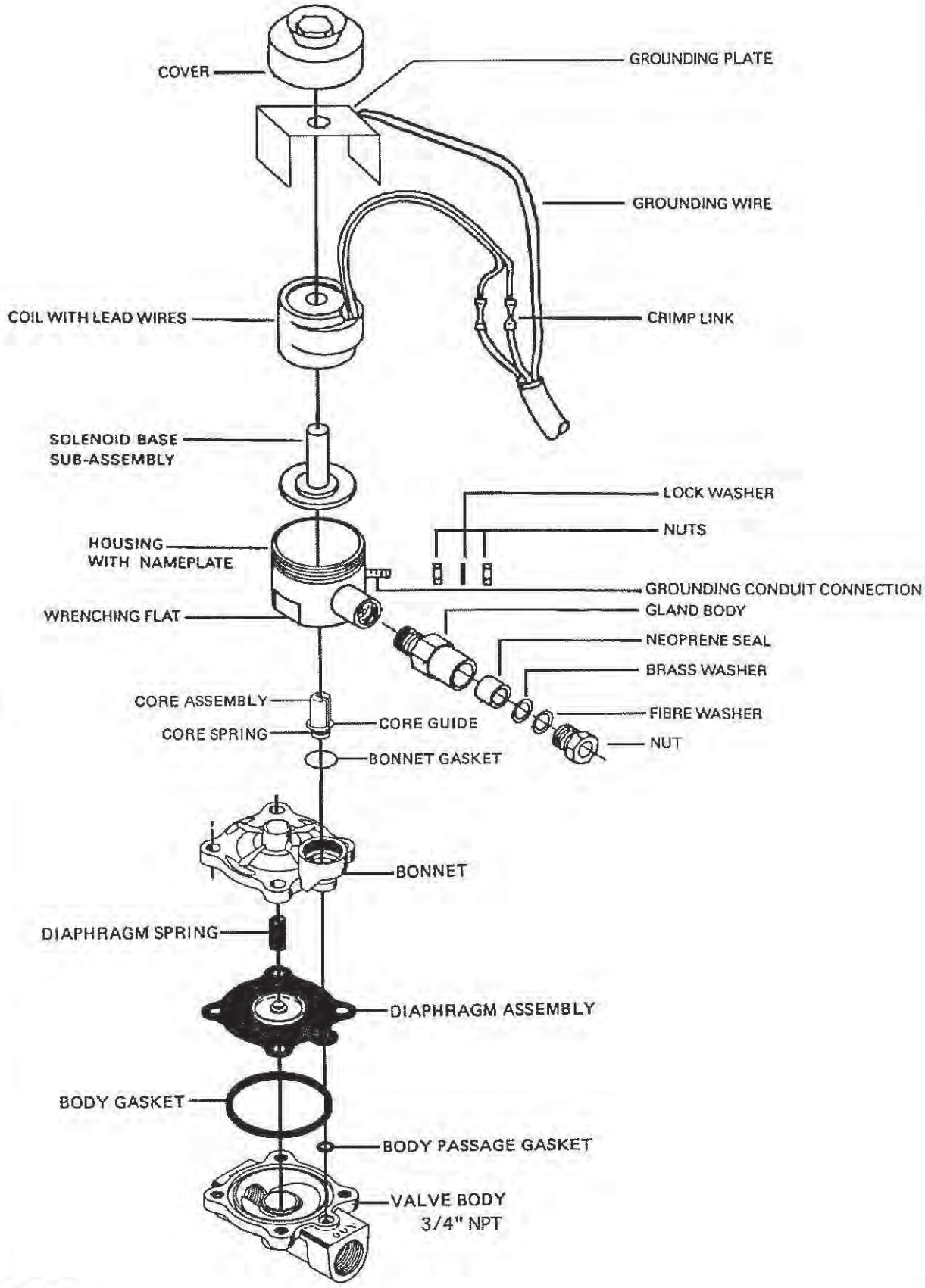

Figure 2

Solenoid valve assembly LPG - ¾" high flow

Item	Part No	Description
	852750	Solenoid Valve ASCO ¾" LPG high flow

Solenoid valve assembly LPG - ¾" high flow

Description

Bulletin 8210 valves are 2-way, normally closed internal pilot operated solenoid valves designed for LP gas (propane) service. Valves are of brass construction.

Bulletin 8211 valves are the same as Bulletin 8210 except the solenoids are equipped with an enclosure which is designed to meet NEMA Type 4 - Watertight, NEMA Type 7 (C or D) Hazardous Locations - Class I Groups C or D and NEMA Type 9 (E, F or G) Hazardous Locations - Class II, Groups E, F or G. Installation and Maintenance Instructions for the

Explosion-Proof/Watertight Solenoid Enclosures are provided on Form No. V-5380.

Operation

Normally Closed: Valve is closed when solenoid is de-energized. Valve opens when solenoid is energized.
Important: Minimum operating pressure differential is 5 psi.

Installation

Check nameplate for correct catalogue number, pressure, voltage and service.

Positioning / Mounting (Refer to Figure 2)

This valve is designed to perform properly when mounted in any position. However, for optimum life and performance, the solenoid should be mounted vertical and upright so as to reduce the possibility of foreign matter accumulating in the core tube area.

Piping

Connect piping to valve according to markings on valve body. Apply pipe compound sparingly to male pipe threads only; if applied to valve threads, it may enter valve and cause operational difficulty. Pipe strain should be avoided by proper support and alignment of piping. When tightening pipe, do not use valve as a lever. Wrenches applied to valve body or piping are to be located as close as possible to connection point.

Important: For the protection of the solenoid valve, install a strainer or filter suitable for the service involved in the inlet side as close to the valve as possible. Periodic cleaning is required, depending on service conditions.

Wiring

Wiring must comply with Local and National Electrical Codes. The general purpose solenoid enclosure may be rotated to facilitate wiring by removing the retaining cap or clip. **Caution**: When metal retaining clip disengages, it will spring upward. Rotate to desired position. Replace retaining cap or clip before operating.

Solenoid Temperature

Standard catalogue valves are supplied with coils designed for continuous duty service. When the solenoid is energized for a long period, the solenoid enclosure becomes hot and can be touched with the hand only for an instant. This is a safe operating temperature. Any excessive heating will be indicated by the smoke and odour of burning coil insulation.

Maintenance

Warning: Turn off electrical power supply and depressurize valve before making repairs. It is not necessary to remove the valve from the pipe line for repairs. A periodic cleaning of all solenoid valves is desirable. The time between cleanings will vary depending on media and service conditions. In general, if the voltage to the coil is correct, sluggish valve operation, excessive noise or leakage will indicate that cleaning is required. Clean valve strainer or filter when cleaning solenoid valve.

Solenoid valve assembly LPG - ¾" high flow

Preventive Maintenance

1. Keep the medium flowing through the valve as free from dirt and foreign material as possible.
2. While in service, operate the valve at least once a month to insure proper opening and closing.
3. Periodic inspection (depending on media and service conditions) of internal valve parts for damage or excessive wear is recommended. Thoroughly clean all parts. Replace any parts that are worn or damaged.

Improper Operation

1. Faulty Control Circuit: Check the electrical system by energizing the solenoid. A metallic click signifies the solenoid is operating. Absence of the click indicates loss of power supply. Check for loose or blown-out fuses, open-circuited or grounded coil, broken lead wires or splice connections.
2. Burned Out Coil: Check for open-circuited coil. Replace coil if necessary.
3. Low Voltage: Check voltage across the coil leads. Voltage must be at least 55% of nameplate rating.
4. Incorrect Pressure: Check valve pressure. Pressure to valve must be within range specified on nameplate.
5. Excessive Leakage: Disassemble valve and clean all parts. Replace worn or damaged parts with a complete Spare Parts Kit for best results.

Coil Replacement (Refer to Figure 1)

Turn off electrical power supply and disconnect coil lead wires.

1. Remove retaining cover.
2. Loosen the gland nut on the cable gland body, lossening the cable in the gland.
3. Withdraw the grounding plate and coil, drawing the cable out through the gland.
4. Reassemble in reverse order of disassembly paying careful attention to exploded view provided for identification and placement of parts. (See figure 2)

Caution: The solenoid must be fully reassembled as the housing and internal parts are part of, and complete the magnetic circuit. Place an insulating washer at each end of coil, if required.

Valve Disassembly & Reassembly (Refer Figure 2)

Depressurize valve and turn off electrical power supply. Proceed in the following manner:

1. Remove retaining cover.
2. Loosen gland nut on the Cable gland body, lossening the cable inthe gland.
3. Withdraw grounding plate and coil, drawing the cable out through the gland.
4. Unscrew solenoid base sub-assembly and remove bonnet gasket and core assembly with core spring and core guide attached. **Note:** a special tool is required for this operation.
5. Remove bonnet screws (4), valve bonnet, diaphragm spring, diaphragm assembly, body gasket and body passage gasket.
6. All parts are now accessible for cleaning or replacement. Replace worn or damaged parts with a complete Spare Parts Kit for best results.
7. Reassemble in reverse order or disassembly paying careful attention to exploded view provided for identification and placement of parts.
8. Torque bonnet screws in a crisscross manner to 130 ± 15 inch-pounds.
9. Torque solenoid base sub-assembly to 175 ± 25 inch-pounds.
10. After maintenance, operate the valve a few times to be sure of proper operation.

Solenoid valve assembly LPG - ⅛" slow flow

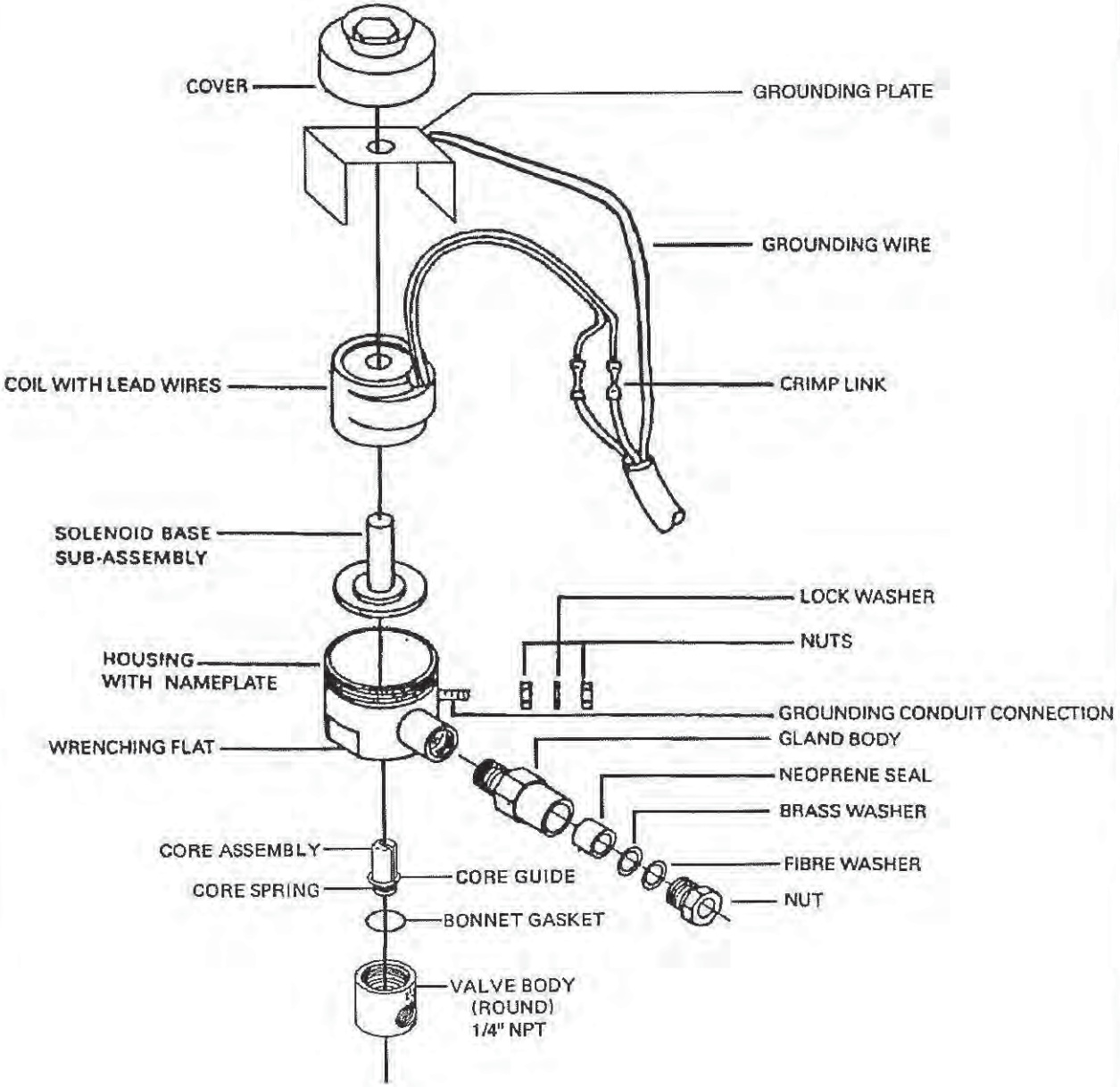

Figure 3

Solenoid valve assembly LPG - ⅛" slow flow

Item	Part No	Description	Qty
	852760	Solenoid Valve ASCO ⅛" for LPG slow flow	1

Solenoid valve assembly LPG - ⅛" slow flow

Description

Bulletin 8262'5 are 2-way, normally closed, direct acting solenoid valves. Valve bodies are of brass construction. Standard valves have a General Purpose, NEMA Type 1 Solenoid Enclosure. Valves may be equipped with an enclosure which is designed 10 meet NEMA Type 4-Watertight, NEMA Type 7 (C or D) Hazardous Locations - Class 1, Groups C or D and NEMA Type 9 (E, F or G) Hazardous Locations - Class II, Groups E, F or G. For Installation and Maintenance Instructions for Explosion-Proof/Watertight Solenoids, refer to Form No. V-5380.

Operation

Normally Closed: Valve is closed when solenoid is de-energized. Valve opens when solenoid is energized.

Important: No minimum operating pressure differential required.

Installation

Check nameplate for correct catalogue number, pressure, voltage and service.

Positioning / Mounting (Refer to Figure 3)

This valve is designed to perform properly when mounted in any position. However, for optimum life and performance, the solenoid should be mounted vertical and upright so as to reduce the possibility of foreign matter accumulating in the core tube area.

Piping

Connect piping to valve according to markings on valve body. Apply pipe compound sparingly to male pipe threads only; if applied to valve threads, it may enter valve and cause operational difficulty. Pipe strain should be avoided by proper support and alignment of piping. When tightening pipe, do not use valve as a lever. Wrenches applied to valve body or piping are to be located as close as possible to connection point.

Important: For the protection of the solenoid valve, install a strainer or filler suitable for the service involved in the inlet side as close to the valve as possible. Periodic cleaning is required, depending upon service conditions.

Wiring

Wiring must comply with Local and National Electrical Codes. The general purpose solenoid enclosure may be rotated to facilitate wiring by removing the retaining cap or clip. **Caution:** When metal retaining clip disengages, it will spring upward. Rotate to desired position. Replace retaining cap or clip before operating.

Solenoid Temperature

Standard catalogue valves are supplied with coils designed for continuous duty service. When the solenoid is energized for a long period, the solenoid enclosure becomes hot and can be touched with the hand only for an instant. This is a safe operating temperature. Any excessive heating will be indicated by the smoke and odour of burning coil insulation.

Maintenance

Warning: Turn off electrical power supply and depressurize valve before making repairs. It is not necessary to remove the valve from the pipe line for repairs.

Cleaning

A periodic cleaning of all solenoid valves is desirable. The time between cleanings will vary depending on media and service conditions. In general, if the voltage to the coil is correct, sluggish valve operation, excessive noise or leakage will indicate that cleaning is required. Clean valve strainer or filter when cleaning solenoid valve.

Solenoid valve assembly LPG - ⅛" slow flow

Preventive Maintenance

1. Keep the medium flowing through the valve as free from dirt and foreign material as possible.
2. While in service, operate the valve at least once a month to insure proper opening and closing.
3. Periodic inspection (depending on media and service conditions) of internal valve parts for damage or excessive wear is recommended. Thoroughly clean all parts. Replace any parts that are worn or damaged.

Improper Operation

1. Faulty Control Circuit: Check the electrical system by energizing the solenoid. A metallic click signifies the solenoid is operating. Absence of the click indicates loss of power supply. Check for loose or blown-out fuses, open-circuited or grounded coil, broken lead wires or splice connections.
2. Burned-Out Coil: Check for open-circuited coil. Replace coil if necessary.
3. Low Voltage: Check voltage across the coil leads. Voltage must be at least 85% of nameplate rating.
4. Incorrect Pressure: Check valve pressure. Pressure to valve must be within range specified on nameplate.
5. Excessive Leakage: Disassemble valve and clean all parts. Replace worn or damaged parts with a complete Spare Parts Kit for best results.

Coil Replacement (Refer to Figure 3)

Turn off electrical power supply and disconnect coil lead wires.

1. Remove retaining cover.
2. Loosen the gland nut on the cable gland body, lossening the cable in the gland.
3. Withdraw the grounding plate and coil, drawing the cable out through the gland.
4. Reassemble in reverse order of disassembly paying careful attention to exploded view provided for identification and placement of parts.

Caution: Solenoid must be fully reassembled as the housing and internal parts are part of and complete the magnetic circuit. Place an insulating washer at each end of coil, if required.

Valve Disassembly & Reassembly (Refer to Figure 3)

Depressurize valve and turn off electrical power supply. Proceed in the following manner:

1. Remove retaining cover.
2. Loosen the gland nut on the cable gland body, lossening the cable in the gland.
3. Withdraw the grounding plate and coil, drawing the cable out through the gland.
4 Unscrew solenoid base sub-assembly and remove bonnet gasket and core assembly with core spring and core guide attached. **Note:** a special tool is required for this operation.
5. All parts are now accessible for cleaning or replacement. Replace worn or damaged parts with a complete Spare Parts Kit for best results.
6. Reassemble in reverse order of disassembly paying careful attention to exploded view provided for identification and placement of parts.
7. Torque solenoid base sub-assembly to 175 ± 25 inch-pounds.
8. After maintenance, operate the valve a few times to be sure of proper operation.

Hose assembly - crimped

Hose assembly - crimped

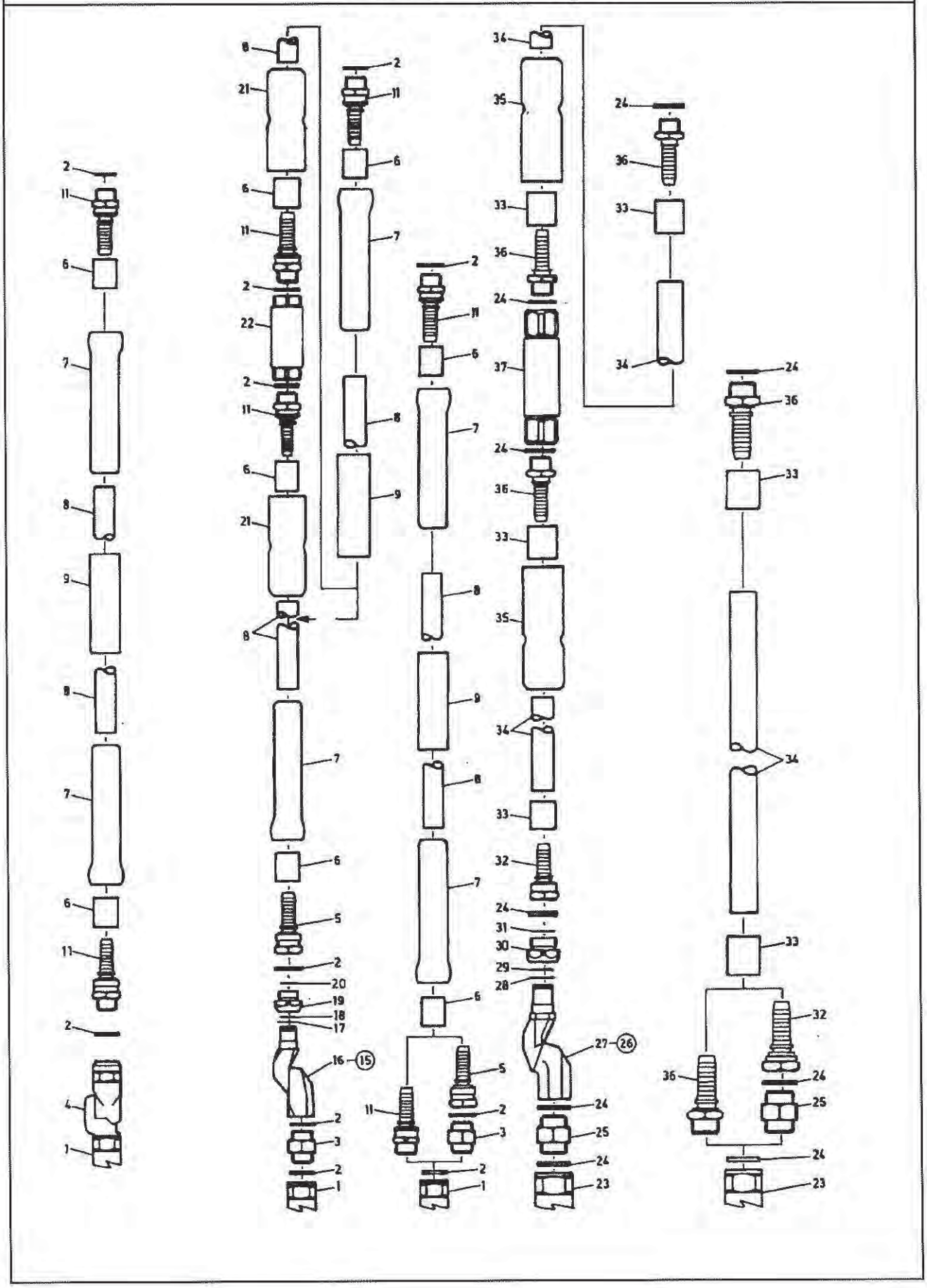

Hose assembly - crimped

Item	Part No	Description
1	...4/4	**ZVA Nozzle ¾"**
1a	--	ZVA Nozzle ¾" [Incl Item 4]
2	.500/6	Hose Sealing Washer ¾"
3	.01799	Male Connector - ¾" BSP
4	--	ZVA ES - Break (Swivel & Break) [Optional] Supplied as Part of Item 1 or as a separate Part
5	.01803	Hosetail Female ¾" BSP x ⅝"
6	.01804	Ferrule-Swage ⅝" Hose
7	--	Anti-Kink Sleeve Various Colours [Optional ⅝"]
8	--	Hose ⅝" ID
9	.05049	Hose Reinforcing Sleeve - Small
10	--	
11	.01802	Hosetail Male ⅞" SAE x ⅝" [Revised 15/9/93, see items 11a and 11b for optional parts]
11a	824160	Adaptor ½" BSPP x ⅞" SAE
11b	824170	Hosetail Swivel ½" BSPP x ⅝" swage
12	.01821	Hosetail Male ⅞" SAE x 1" [Diesel only]
13	--	--
14	--	--
15	.01546	Husky Dual Swivel Assy C/W Nut [Incl Item 16-20]
16	..1+V1	Husky Swivel 1+V1 Mighty - Pup
17	../020	Large Vix-Syn "O" Ring -020
18	../018	Small Vix-Syn "O" Ring -018
19	.01544	Husky Swivel Nut - ¾" BSP
20	--	Husky Swivel Circlip
21	829520	Scuff Guard For C86 Coupling
22	...C86	Catlow Breakaway Coupling 3/4"
22a	822050	Repair Kit - Shear Pin C86R-2
22b	822140	Shear Pin HD A7-1 G10 (C86)
22c	822150	Repair Kit - Pin & "O" Ring Only C86-1
22d	822160	Repair Kit "O" Rings Only C-86
23	.25/41	**ZVA Nozzle 1"**
24	.43003	Sealing Washer 1"
25	.01809	Male Connector - 1" BSP
26	.01583	Husky 1" Swivel Assy C/W Nut
27	..1+V1/T	Husky "Top Dog" Hose Swivel
28	--	"O" Ring Large
29	--	"O" Ring Small
30	.01582	Husky Swivel Nut - 1" BSP
31	--	Husky Swivel Circlip 1"
32	.01823	Hosetail Female 1" BSP x 1"
33	.01822	Ferrule - Swage 1" Hose
34	--	Hose 1"
35	829530	Scuff Guard For C100 Coupling
36	.01824	Hosetail Male 1" BSP x 1" [Used in breakaway coupling - NZ only]
37	..C100	Catlow Breakaway Coupling 1"
37a	822070	Repair Kit For C100 Coupling
38	--	--
39	.02245	Hosetail Reducing Bush 1" - ¾" BSP [To allow Item 34 to be used with Item 11]

Hose assembly - crimped

Hose assembly - LPG

Hose assembly - LPG

Hose assembly - LPG

	Part No	Description
	.07655	LPG hose assembly - long
	.07656	LPG hose assembly - short
		Certified hoses

Hose assembly - LPG

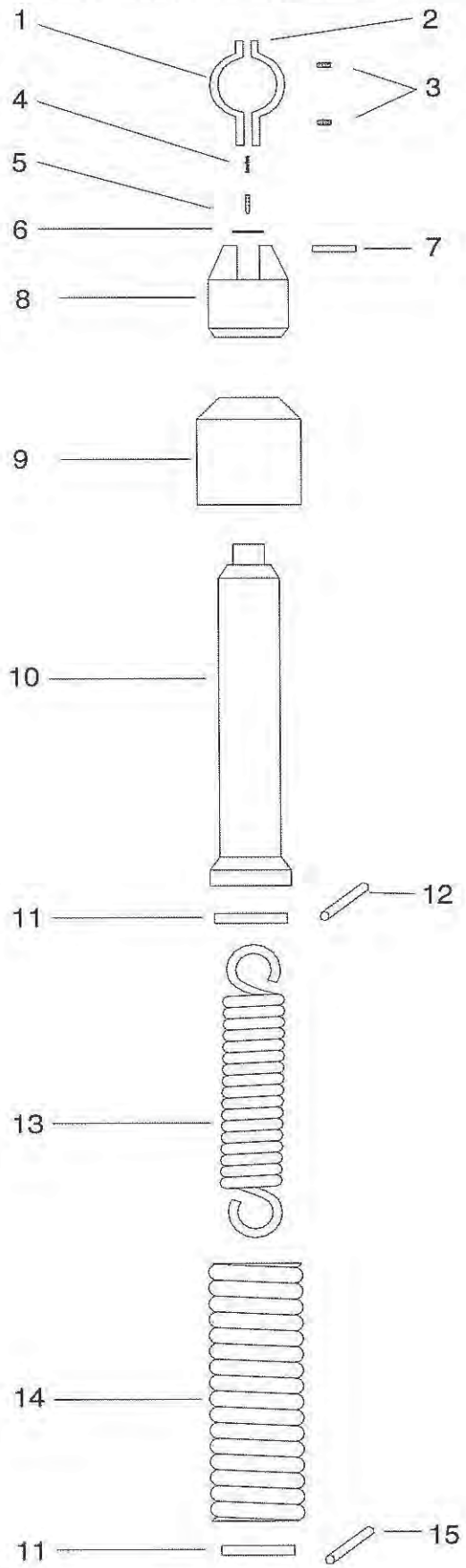

Hose assembly - LPG

Item	Part No	Description	Qty
1	.05046	Hose clamp - LH universal	1
2	.05047	Hose clamp - RH universal	1
3	801100	Capscrew skt 1/4 whit x 3/4 S/S	2
4	.07679	Spring - swivel stud	1
5	.07678	Swivel stud	1
6	804460	Washer flat steel M6 x 16mm	1
7	.05019	Hose clamp pivot pin	1
8	.83737	Hose swivel body	1
9	.87924	Spring cap	1
10	.83731	Spring extension assrmbly S/S	1
11	.05052`	Lower retaining disc	2
12	.05063	Retaining pin short	1
13	.83735	Stranghtening spring	1
14	.87925	Spring (pipe)	1
15	.05053	Retainign pin long	1

Hose assembly - LPG

ZVA nozzle assembly
- ¾ & 1 inch

ZVA nozzle ¾"

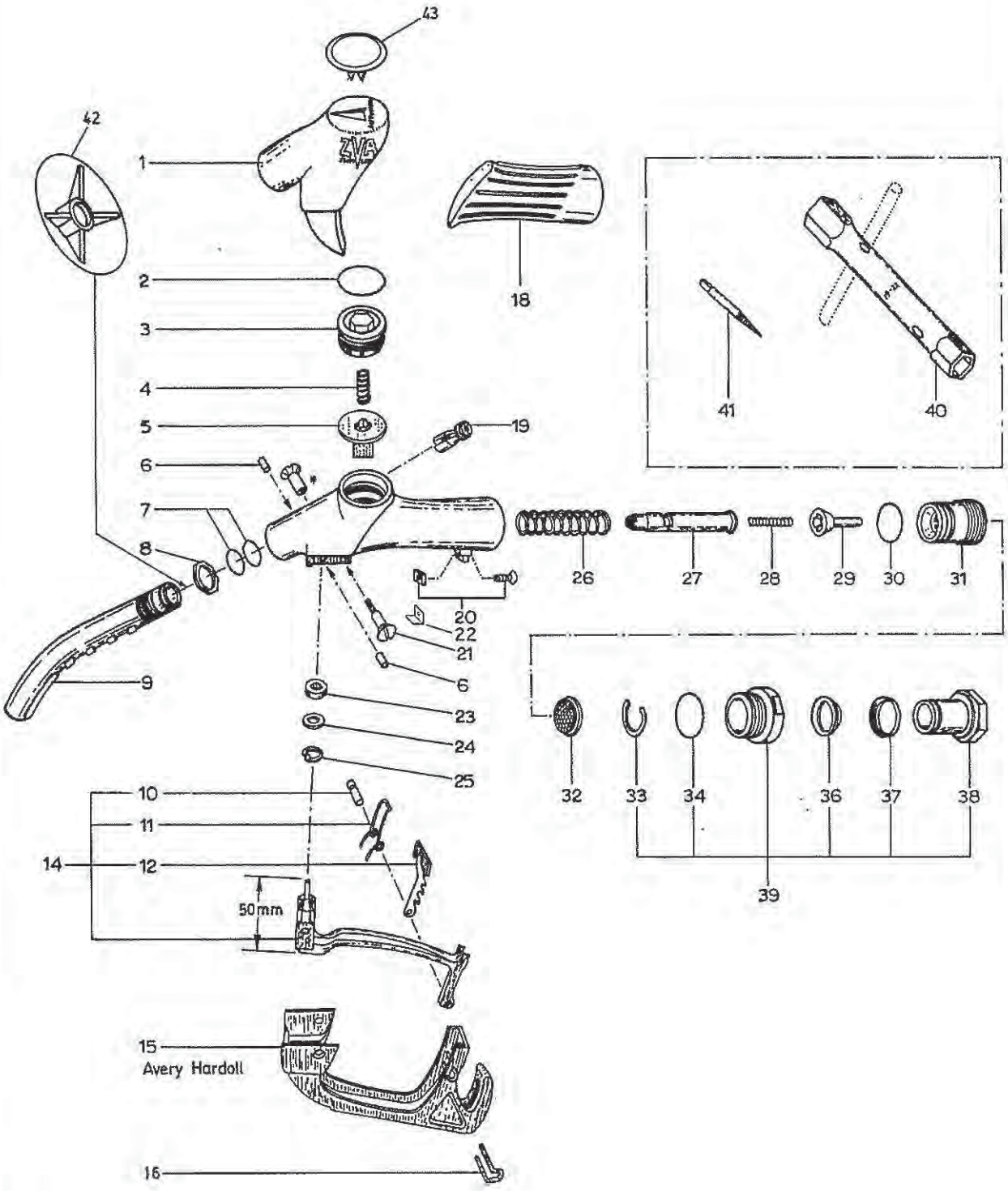
43
42
1
ZVA
2
3
4
5
6
7
8
9
18
19
20
22
21
6
23
24
25
10
11
14
12
50mm
15
Avery Hardoll
16
41
40
26
27
28
29
30
31
32
33
34
36
37
38
39

ZVA nozzle ¾"

Item	Part No	Description	Qty
	4/4U	ZVA Nozzle ¾" (Breakaway Spout) [includes items 1-38]	1
1	EK144	ZVA Plastic Cover (Black)	1
1a	EK144/B	ZVA Plastic Cover (Blue)	--
1b	EK144/G	ZVA Plastic Cover (Green)	--
1c	EK144/R	ZVA Plastic Cover (Red)	--
1d	EK144/Y	ZVA Plastic Cover (Yellow)	--
2	EO271	ZVA O Ring (Vacuum Cap)	1
3	EK147	ZVA Vacuum Cap - Derlin	1
4	EF250	ZVA Diaphragm Spring	1
5	EA151	ZVA Diaphragm Assembly	1
6	EB235	ZVA Lever Pin	2
7	EO255	ZVA O Ring (Spout)	2
8	EM245	ZVA Spout Locknut	1
9	ER242/1	ZVA Spout	1
9a	ER242/8	ZVA Spout (Break Off)	1
9b	ER242/7	ZVA Spout (Unleaded)	1
9c	ER242/7U	ZVA Spout (Unleaded Break Off)	1
10	EB285	ZVA Regulator Pin	1
11	EF286-1	ZVA Regulator Spring	1
12	EF184	ZVA Regulator Latch	1
13	--	--	--
14	EA189	ZVA Leaver Assembly	1
15	EG281-4	ZVA Guard - Avery Hardoll	1
16	EB280	ZVA Removable Latch Pin	1
17	--	--	--
18	EK138	ZVA Insulating Grip	1
19	EA243-2	ZVA Safety Cut Out Ball Assembly	1
20	EB278	ZVA Nut & Screw	1
21	EB438	ZVA Nut & Screw	1
22	09077	Trigger stop (Australia only)	1
23	ED237	ZVA Lever Gland	1
24	EU226	ZVA Washer	1
25	EC231	ZVA Circlip - Small	1
26	EF162	ZVA Main Spring	1
27	EA158	ZVA Plunger Assembly	1
28	EF265	ZVA Check Valve Assembly	1
29	EV167	ZVA Poppet	1
30	EO171	ZVA O Ring (Poppet Valve Seat)	1
31	EG169	ZVA Valve Seat	1
32	EK172	ZVA Strainer	1
33	EC183	ZVA Swivel Circlip - Large	1
34	E0177	ZVA O Ring (Swivel)	1
35	--	--	--
36	EK178	ZVA Backing Ring	1
37	ED179N	ZVA Swivel U Seal	1
38	--	ZVA Swivel Connection-Parallel Female ¾"BSP	1
39	EA175	ZVA ¾" Swivel (Hose Connection)	1
40	EW19-22	ZVA Nozzle Spanner (For EK147-EG169)	1
41	EW2CV	ZVA Punch - For EB235	1
42	829590	Gas Guard G16 (Black)	1
42a	829550	Gas Guard G16 (Blue)	--
42b	829560	Gas Guard G16 (Green)	--
42c	829570	Gas Guard G16 (Yellow)	--
42d	829580	Gas Guard G16 (Red)	--
43	Ek145	ZVA Product Badge	--

ZVA nozzle 1"

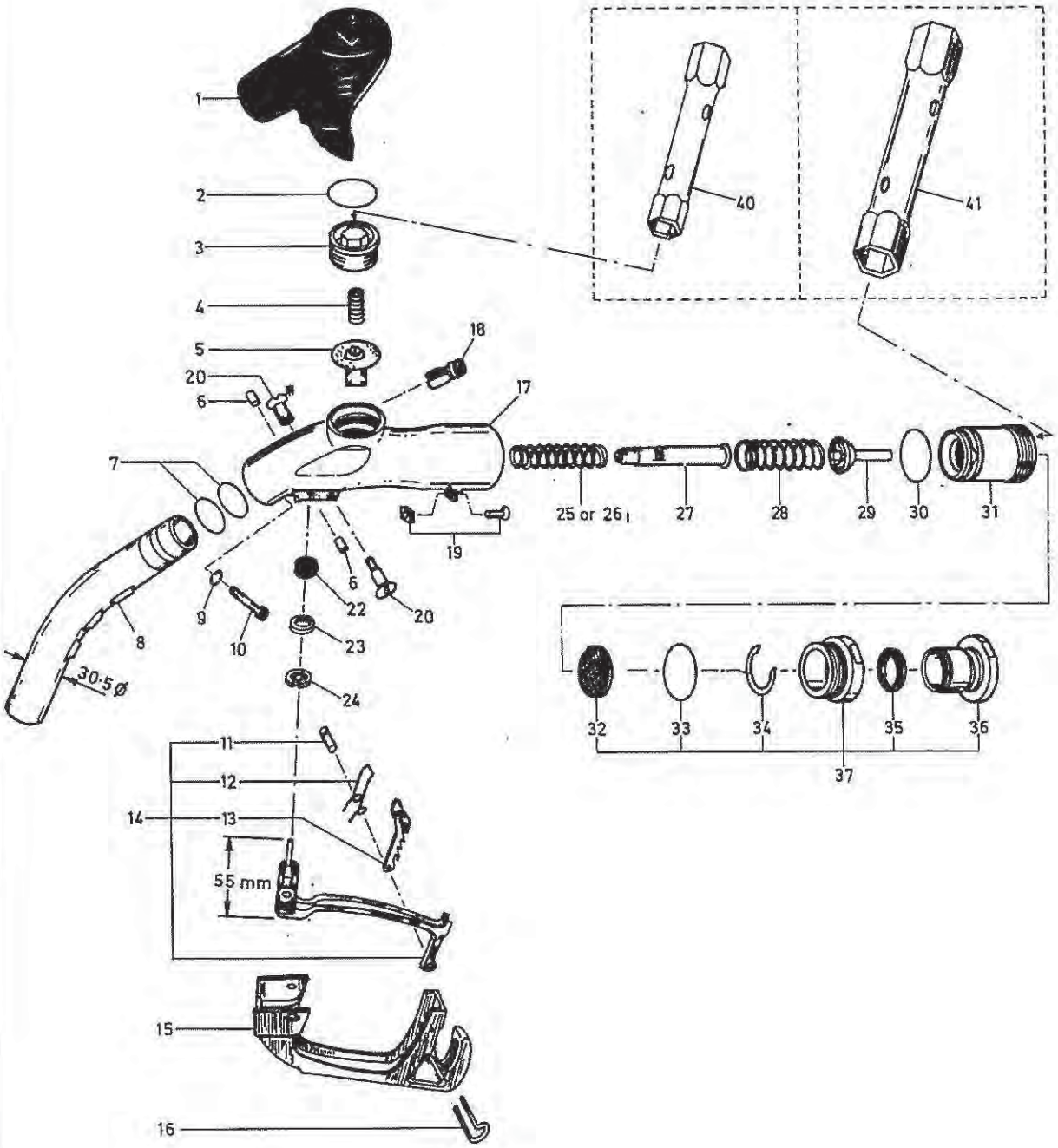
1
2
3
4
5
20
6
7
18
17
25 or 26
27
28
29
30
31
19
6
20
22
9
10
23
8
30·5Ø
24
32
33
34
35
36
37
11
12
14
13
55 mm
15
16
40
41

ZVA nozzle 1"

Item	Part No	Description	Qty
1	EK344	ZVA 25 Plastic Cover	1
2	EO271	ZVA O Ring (Vacuum Cap)	1
3	EK147	ZVA Vacuum Cap - Delrin	1
4	EF250	ZVA Diaphragm Spring	1
5	EA151	ZVA Diaphragm Assembly	1
6	EB235	ZVA Lever Pin	2
7	EO378	ZVA O Ring	2
8	ER381	ZVA 25 Spout	1
9	EO447	ZVA Washer	1
10	EB384	ZVA 25 Spout Bolt	1
11	EB285	ZVA Regulator Pin	1
12	EF286/1	ZVA Regulator Spring	1
13	EF184	ZVA Regulator Latch	1
14	EA389	ZVA 25 Lever Assembly. Regulator	1
15	EG281/4	ZVA Guard No. 4 (Avery Hardoll & GB)	1
16	EB280	ZVA Removable Latch Pin	1
17	--	ZVA Body	1
18	EA243/2	ZVA Safety Cut-out Ball Assembly.	1
19	EB278	ZVA Rear Screw Assembly. (Nut & Screw)	1
20	EB438	ZVA Front Screw Assembly. (Nut & Screw)	1
21	--	--	--
22	ED237	ZVA Lever Gland	1
23	EU226	ZVA Washer	1
24	EC231	ZVA Circlip - Small	1
25	EF362	ZVA 25 Main Spring (Std. - 66 mm)	1
26	EF362/6	ZVA 25 Main Spring (6 Bar - 74 mm)	1
27	EA158	ZVA Plunger Assembly. (Latch)	1
28	EF378/8	ZVA 25 Check Valve Spring-8 PSI	1
29	EV374	ZVA 25 Poppet	1
30	EO271	ZVA O-Ring	1
31	EG377	ZVA 25 Valve Seat	1
32	EK372	ZVA 25 Strainer	1
33	EO348	ZVA O-Ring	1
34	EC383	ZVA 25 Circlip - Swivel	1
35	ED179N	ZVA Swivel U Seal	1
36	--	ZVA 1" BSP Parallel Female Swivel Connection	1
37	--	--	--
40	EW19-22	ZVA Box Spanner for Valve Seat & Vacuum Cap	--
41	EW27-32	ZVA Box Spanner for Valve Seat (Old types) & Vacuum Cap	
--	EW41	Open-ended Spanner for Hose Inlet	--
--	EW2CV	Extractor for Lever Pin	--

Gas Guard nozzle

Gas Guard nozzle

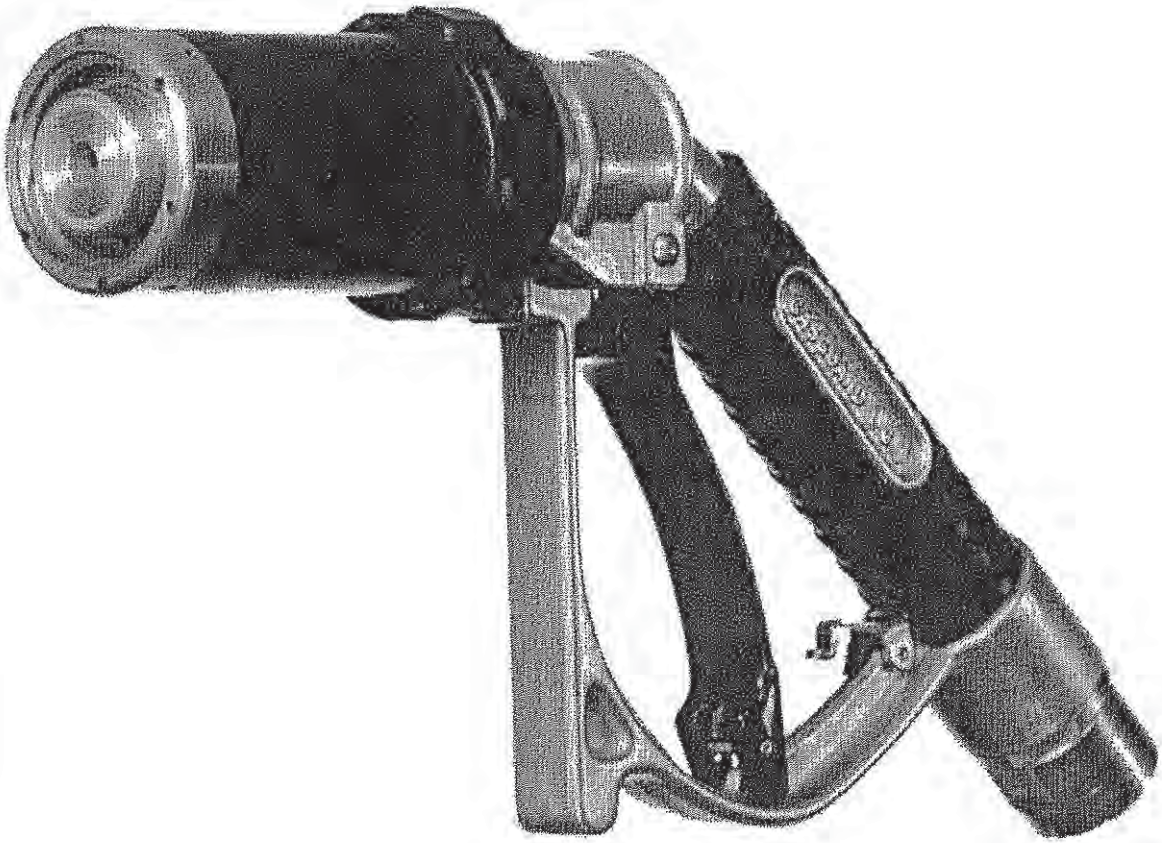

Gas Guard nozzle

	Part No	Description
	..4/1	LPG nozzle - Gas Guard

Gas Guard nozzle

Tatsuno pump (PGS-0257) & air separator

Pump PGS-0257 Tatsuno internal gear type

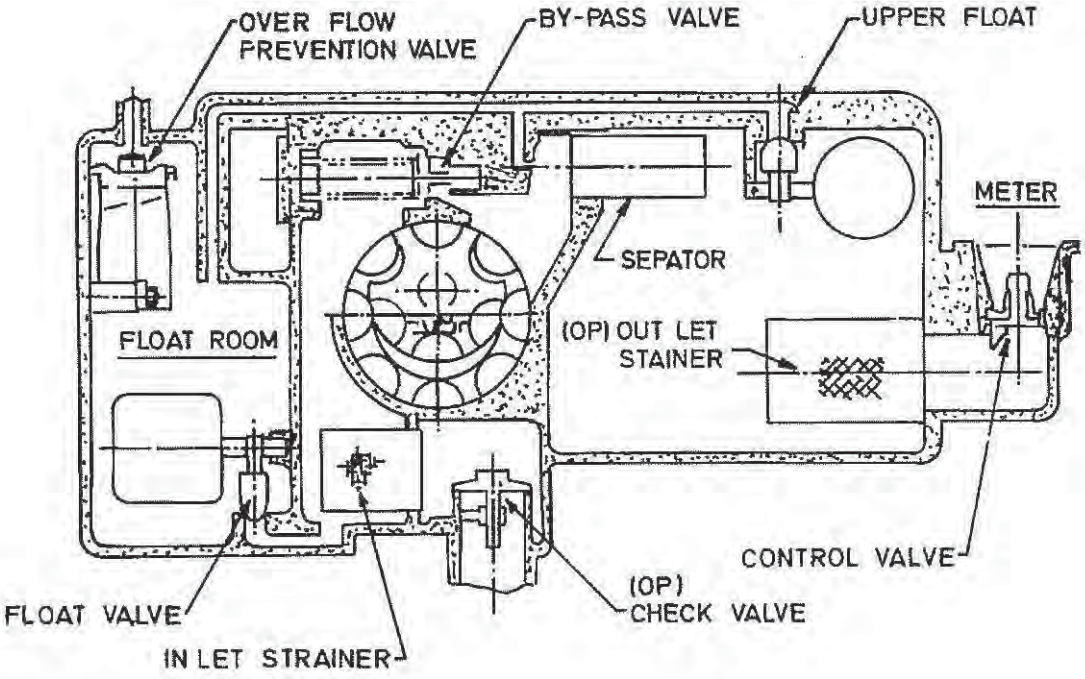

Pump PGS-0257 Tatsuno internal gear type

Check valve (optional)

This check valve is designed to hold liquid in the pump when the pump stops. The built-in check valve can protect the pump from leakage of liquid by keeping the pipe negative pressure between the pump and underground tank.

Inlet strainer

The strainer protects the pump from dust and foreign particle in liquid.

Pump

The internal gear pump consists of wheel and pinon. the wheel is driven by motor to suck and deliver liquid by volume change between wheel and pinion.

Separator

This is a centrifugal type separator in separation of air in the liquid. Light air in specific gravity and small quantity of liquid are sent to a float room.

Upper float (optional)

When a large amount of air is sucked, the float is lowered to open a connect valve, and the air is forced to pass to the float room so that the air may not enter the flow meter.

Outlet strainer (optional)

This strainer is highly effective for the increasing clean gasoline delivery.

Control valve

This valve prevents the back-flow of liquid from the flow meter etc., and also returns the liquid to the pump when the pressure inside the pipe line is abnormally increased.

By-pass valve

This valve circulates the liquid within the pump adjusts a closed pressure when nozzle is closed or fuelling is made at slow speed.

Float room

Air and liquid are separated here respectively. The air is released outside through the air vent, and the liquid is returned to the suction side. The room has 1.6-litre capacity (1.8 times compared with the previous model).

Float valve

When the liquid reaches a certain level, the float drifts, the float valve is lifted, and a pass to suction side is opened.

Overflow prevention valve

This valve prevents the liquid from overflow through the air-vent, when the liquid level in the float room rises abnormally.

Pump PGS-0257 Tatsuno internal gear type

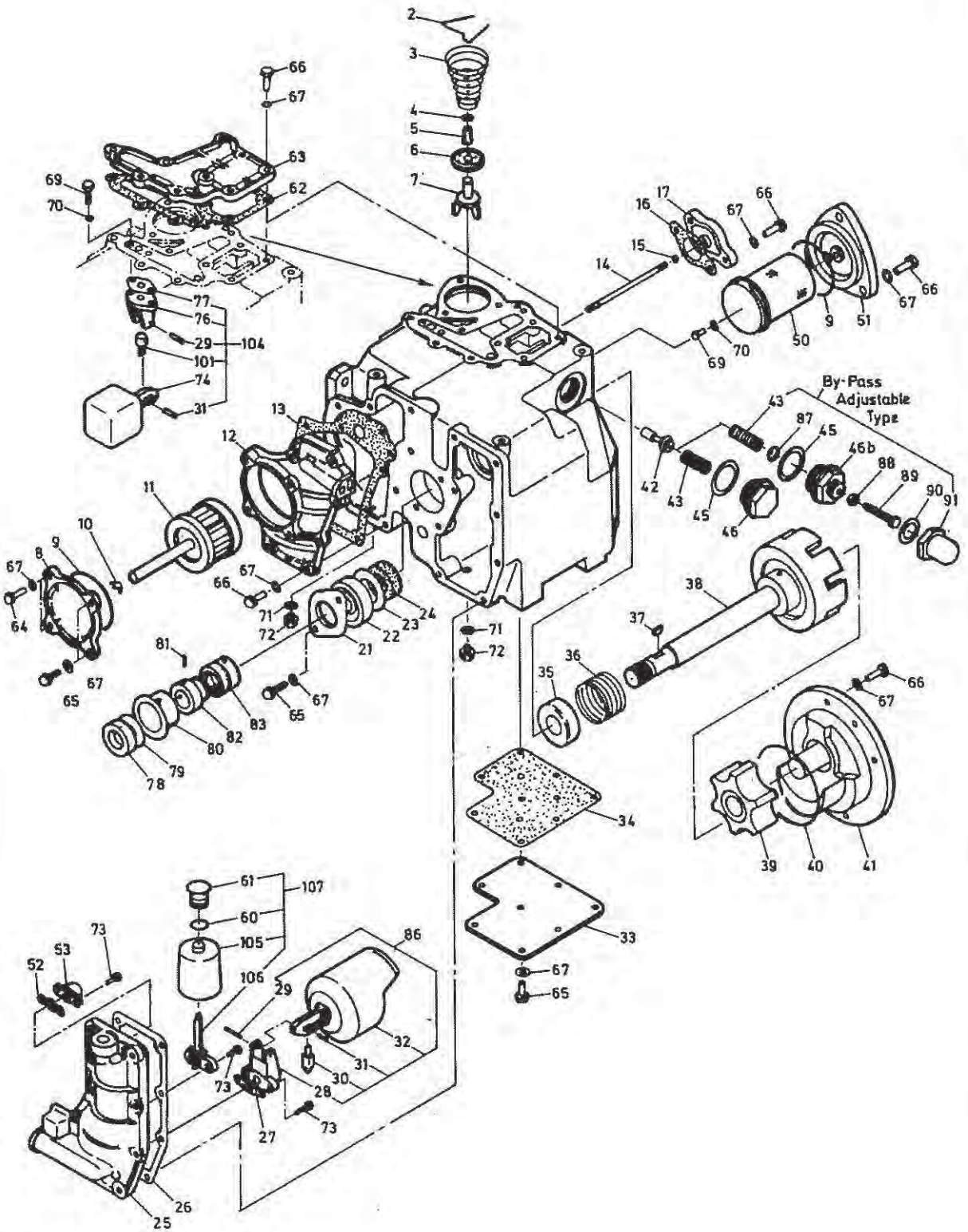

Pump PGS-0257 Tatsuno internal gear type

Item	Part No	Description	Qty
A	820060	Pump unit Tatsuno PGS-0257-K (Std/Spd)	1
B	820070	Pump unit Tatsuno PGS-0257-L (H/Spd)	1
1	..2807/01	Body assembly PGS-0257-SA0602	1
2	..2807/02	Triangle ring PGS-0253-92A	1
3	..2807/03	Spring PGS-0255-16	1
4	..2807/04	Retaining ring (E Type) RING -E07	1
5	..2807/05	Spring PGS-0253-200	1
6	..2807/06	Disc control valve Q-420	1
7	..2807/07	Valve stem PGS-0253-175A	1
8	..2807/08	Strainer cover (Q-553-1)	1
8b	..2807/08b	Strainer cover (For Ues Outlet Strainer)	
9	..2807/09	0-Ring G-65	2
10	..2807/10	Wing nut (For Use Outlet Strainer) NUT/WG050	1
11	..2807/11	Outlet strainer (Option) Q-725	1
12	..2807/12	Seperator cover Q-551A-1	1
13	..2807/13	Gasket PGS-0255-17A	1
14	..2807/14	Fixture saft.(For use outlet strainer) PGS-0255-20	1
15	..2807/15	Nut (For ues outlet strainer) NUT-050	1
16	..2807/16	Gasket PGS-0255-20	1
17	..2807/17	Cover Q-554	1
18	--	--	
19	..2807/19	Nut NUT-060	2
20	..2807/20	Stud bolt BLT/S-06014	2
21	..2807/21	Bearing Cover PGS-0257-15	1
22	..2807/22	Bearing G204Z	1
23	..2807/23	Washer PGS-0255-27	1
24	..2807/24	Oil seal Q-563	1
25	..2807/25	Float cover Q-552	1
26	..2807/26	Gasket PGS-0255-18A	1
27	..2807/27	Gasket PGS-0255-21	1
28	..2807/28	Float valve body PGS-0255-5	1
29	..2807/29	Spring pin PIN/SP-3024	2
30	..2807/30	Float valve PGS-0253-52B	1
31	..2807/31	Pin PGS-0255-24	1
32	..2807/32	Float Q-561	1
33	..2807/33	Cover PGS-0257-16	1
34	..2807/34	Gasket PGS-0257-17	1
35	..2807/35	Washer PGS-0257-19	1
36	..2807/36	Spring PGS-0257-20	1
37	..2807/37	Woodruff key PGS-0257-102	1
38	..2807/38	Wheel & shaft assembly PGS-0257-SA02	1
38b	..2807/38b	Wheel & shaft assembly (for high speed type) PGS-0257-SA03	1
39	..2807/39	Pinion Q-364A	1
39b	..2807/39b	Pinion (for high-speed type) Q-365A	1
40	..2807/40	O-Ring G-95	1
41	..2807/41	Pump cover assembly PGS-0257-SA04	1
41b	..2807/41b	Pump cover assembly (for high-speed type) PGS-0257-SA05	1
42	..2807/42	By-Pass valve PGS-0257-21	1
43	..2807/43	By-Pass valve spring by-pass pressure 1.55kgf/cm sq PGS-0257-5	1

Pump PGS-0257 Tatsuno internal gear type

Item	Part No	Description	Qty
43b	..2807/43b	By-Pass valve spring By-pass pressure 2.2kgf/cm sq PGS-0257-6	1
43c	..2807/43c	By-Pass valve spring By-pass pressure 1.6-2.1 kgf/cm sq PGS-0253-29-2	1
43d	..2807/43d	By-Pass valve spring By-pass pressure 2.3-2.9 kgf/cm PGS-0255-30	1
43e	..2807/43e	By-Pass valve spring By-pass pressure 2.0 kgf/cm sq PGS-0257-28	1
43f	..2807/43f	By-Pass valve spring By-pass pressure 2.6 kgf/cm sq PGS-0257-29	1
43g	..2807/43g	By-Pass valve By-pass pressure 2.4 kgf/cm sq PGS-0257-33	1
43h	..2807/43h	By-Pass valve By-pass pressure 1.5-2.6 kgf/cm sq PGS-0257-32	1
44	--	--	
45	..2807/45	Gasket PGS-0253-26A	1
46	..2807/46	Plug PGS-0257-11	1
46b	..2807/46b	Plug PGS-0253-25C (for By-pass adjustable type)	1
47	--	--	
48	--	--	
49	--	--	
50	..2807/50	Inlet strainer Q-724	
51	..2807/51	Strainer cover PGS-0253-191C	1
52	..2807/52	Gasket PGS-0255-22	1
53	..2807/53	Valve seat Q-556	1
54	--	--	
55	--	--	
56	--	--	
57	--	--	
58	--	--	
59	--	--	
60	..2807/60	Ring PGS-0255-25	1
61	..2807/61	Lip seal Q-564	1
62	..2807/62	Gasket PGS-0257-18	1
63	..2807/63	Cover q-716	1
64	..2807/64	Bolt BLT-08045	2
65	..2807/65	Bolt BLT-08020	12
66	..2807/66	Bolt BLT-08025	32
67	..2807/67	Lock washer WSHR/S-080	46
68	--	--	
69	..2807/69	Bolt BLT-06015	1
70	..2807/70	Lock washer WSHR/S-060	3
71	..2807/71	Gasket PGS-0255-23	3
72	..2807/72	Flange bolt BLT/FG-08012	3
73	..2807/73	Screw with lock washer S/W-PB0615	6
74	..2807/74	Float Q-719	1
75	--	--	
76	..2807/76	Float valve body PGS-0257-13	1
77	..2807/77	Gasket PGS-0257-14	1
78	..2807/78	Nut NUT-160	1
79	..2807/79	Plain washer WSHR/P-160	1
80	..2807/80	Stop ring Q-737	1
81	..2807/81	Screw S-PA0618	2
82	..2807/82	Adjusting unit PGS-0257-24	1
83	..2807/83	Adjusting unit PGS-0257-25	1
84	--	--	
85	--	--	
86	..2807/86	Float valve assembly PGS-0257-SA010	1

Pump PGS-0257 Tatsuno internal gear type

Item	Part No	Description		Qty
87	..2807/87	Spring seat PGS-0253-28A1	For By-Pass Adjustable Type	
88	..2807/88	Nut NUT-080		1
89	..2807/89	Adjusting bolt PGS-0257-26		1
90	..2807/90	Gasket PGS-0253-24		1
91	..2807/91	Cap PGS-0253-23C		1
92	--	--		--
93	--	--		--
94	--	--		--
95	--	--		--
96	--	--		--
97	--	--		--
98	--	--		--
99	--	--		--
100	--	--		--
101	..2807/101	Float valve PGS-0257-31		1
102	..2807/102	Valve stem PGS-0257-30		1
103	..2807/103	Pin PGS-0257-130		1
104	..2807/104	Upper float assembly PGS-0257-SA011		1
105	..2807/105	Float Q-846		1
106	..2807/106	Float guide Q-558A		1
107	..2807/107	Overflow prevention valve assembly PGS-0257-SA012		1

Pump PGS-0257 Tatsuno internal gear type